Repair Manual

911 Carrera
(993)

Volume VII:
Wiring diagrams

Dr. Ing. h.c. F. Porsche Aktiengesellschaft

Volume I:	**Overall vehicle – General**	**0**
General	Maintenance, diagnosis	03
Engine		
	Engine	**1**
	Engine – Crankcase, mounting	10
	Engine – Crankshaft, pistons	13
	Engine – Cylinder head, valve drive	15
	Engine – Lubrication	17
	Engine – Cooling	19
	Fuel, exhaust system, engine electrical system	**2**
	Fuel supply, control	20
	Exhaust system – Turbocharging	21
	Fuel system, electronic injection	24
	Fuel system, K-Jetronic	25
	Exhaust system	26
	Starter, power supply, GRA	27
	Ignition system	28

Volume II:	**Transmission**	**3**
Transmission	Clutch, control	30
Manual transmission	Manual transmission – Controls, case	34
	Manual transmission – Gears, shafts, inner operation	35
	Final drive, differential, differential lock	39

Volume III:	**Transmission**	**3**
Transmission	Automatic transmission – Torque converter	32
Automatic transmission	Automatic transmission – Controls, case	37
	Automatic transmission – Gears, control	38
	Final drive, differential, differential lock	39

Volume IV:	**Chassis**	**4**
Chassis	Front wheel suspension, drive shaft	40
	Rear wheel suspension, drive shaft	42
	Wheels, tires, alignment	44
	Anti-Lock System (ABS)	45
	Brakes – Mechanical	46
	Brakes – Hydraulics, regulator, booster	47
	Steering	48

Volume V:	**Body**	**5**
Body	Body front section	50
	Body center section, roof, frame	51
	Body rear section	53
	Hoods, lids	55
	Front doors, Central Locking System	57
	Exterior body equipment	**6**
	Sunroof	60
	Soft top, hardtop	61
	Bumpers	63
	Glasses, window control	64
	Exterior equipment	66
	Interior equipment, passenger protection	68
	Interior body equipment	**7**
	Trim, insulation	70
	Seat frames	72
	Seat upholstery, covers	74
Volume VI:	**Air conditioning**	**8**
Air conditioning	Heater	80
Vehicle electrics	Ventilation	85
	Air conditioning	87
	Auxiliary air conditioning system	88
	Electrical system	**9**
	Instruments, alarm	90
	Radio, telephone, on-board computer	91
	Windshield wipers and washer	92
	Exterior lights, lamps, switches	94
	Interior lights, lamps, switches	96
Volume VII:	**Electrical system**	**9**
Wiring diagrams	Wiring	97
Volume VIII:	**Diagnosis**	**D**
Diagnosis	Self-diagnosis	03
	DME Diagnosis	24
	Tiptronic Diagnosis	37
	PDAS Diagnosis	39
	ABS Diagnosis	45
	Airbag Diagnosis	68
	Heater Diagnosis	80
	Alarm Diagnosis	90

Preface

Structure

The "Technical Literture" for the "911 Carrera (993)" model is basically structured as before, i.e. the structure follows the familiar repair groups.

A new feature is that the structure includes the main groups **0 to 9** and the main group **D**.

Main groups:	0	Complete vehicle – General
	1	Engine
	2	Fuel, exhaust, engine electrical system
	3	Transmission
	4	Chassis
	5	Body
	6	Body equipment, outside
	7	Body equipment, interior
	8	Air conditioning
	9	Electrical system
	D	Diagnosis

Layout

The layout in the below items remains unchanged throughout the repair manual

1. Table of tightening torques
2. Special tools required
3. Exploded views
4. Legends for the exploded views
5. Assembly notes / use of special tools

As a new feature, however, the former item 6 (Repair group diagnosis) is no longer filed in the volume corresponding to the respective repair group. The **Diagnosis test plans / diagnosis procedures** have been combined in a **separate Diagnosis volume** broken down according to the main groups 0 to 9.

Another new feature is that the contents of the "Service Information Technik" are indicated in the Repair Manual. This brochure concentrates on a description of the design and function of components and of the new features introduced for a particular model year.

Service Number

All major repair procedures and repair descriptions are identified by a two- or four-digit **Service Number** completed by two additional digits to identify the work that corresponds to the first six digits of the working position number in the Working Times and Damage Catalog.

Example: 30 37 37 Dismantling and assembling clutch control shaft

Explanation: **30** **37** **37** **50** (full working position number)

Repair group
here: Clutch, control

Component designation
here: Clutch control shaft

Activity
here: Dismantling and assembling

Index
here: Removed

Presentation in the various documents

30 37 37 50	Working position no. from **Working Times and Damage Catalog**, consisting of repair group, component designation, activity and index
30 37 37	Six-digit number in **Repair Manual**, consisting of repair group, component designation and activity
30 37	Service number in **Service Information**, consisting of repair group and component designation

Goal

The introduction of a service number in the "technical literature" is intended to facilitate standardization and positive identification to allow direct cross-referencing among the various documents. This is of particular importance with regard to the use of electronic media.

VII Wiring Diagrams

The Repair Manual of the 911 Carrera (993) also includes the 911 Carrera 4 manual (993 four-wheel drive). The 911 Carrera (993) is the basic model covered by the repair operations described in this Manual. "911 Carrera (993)" is also indicated in the header of each page.

Descriptions of repair operations that deviate for the 911 Carrera 4 will be included after the respective 911 Carrera section. The repair descriptions of both models are separated by a cover page. All pages included after the cover page (separation sheet) have the "911 Carrera 4" heading. To facilitate distinction, the page numbering will start with 100.

9 Electrical System

97 Wiring

97 90	Support, left-hand engine compartment side	97 - 01
97 97	Support, right-hand engine compartment side	97 - 02
97 09	Passenger compartment wiring harness	97 - 03
97 09 41	Repairing the passenger compartment wiring harness	97 - 05
97 16 41	Repairing the front-end wiring harness	97 - 07
97 09	Spare part - passenger compartment wire harness for Model '95	97 - 011
97 50 41	Repairing wire harness no. 173 (DME)	97 - 013
97 52	Engine wire harness	97 - 014
97 52	Spare part - passenger compartment wire harness for Model '96	97 - 015
97 09	Spare part - passenger compartment wire harness Model '96	97 - 017
97 09	Spare part - passenger compartment wire harness for Model '97	97 - 019
97	Wiring diagram 911 Carrera (993) model '94	97 - 1
97	Wiring diagram 911 Carrera (993) model '95	97 - 37
97	Wiring diagram 911 Carrera (993) model '96	97 - 77
97	Wiring diagram 911 Carrera (993) model '97/98	97 - 117

Printed in Germany - 22. 1997

Survey of contents of Service Information Technik '95

The Service Information gives a detailed description of the technical features of the new 911 Carrera.

	Rep. Gr.	Page
Engine		
General		1 - 1
Engine cross-sections	10	1 - 4
Full-load curve		1 - 6
Belt pulley	13	1 - 8
Pistons	13	1 - 10
Hydraulic valve lash adjuster	15	1 - 16
Setting the timing	15	1 - 18
USA - auxiliary air pump		1 - 19
Fuel and ignition systems		
General		2 - 1
DME - Schematic	24	2 - 2
Fuel - air flow	24	2 - 3
Exhaust gas flow	26	2 - 5
DME control unit 2.10.1	24	2 - 9
Mass air flow sensor	24	2 - 12
Throttle potentiometer	24	2 - 18
Ignition system	28	2 - 24
Plausibility test		2 - 28
Diagnosis		2 - 29
Auxiliary air pump	26	2 - 33
Power transmission		
Transmission	30	3 - 1
Clutch	30	3 - 2
Manual transmission	34	3 - 3
Transmission ratios		3 - 6
Gear set	35	3 - 8
Synchromesh	35	3 - 9
Final drive	39	3 - 13
Oil supply		3 - 15
Porsche Tiptronic	37	3 - 16
Modifications for the '95 model year		3 - 17

	Rep. Gr.	Page
Running gear		
General		4 - 1
Front axle	40	4 - 2
Steering	48	4 - 7
Rear axle	42	4 - 8
Elasto-kinematic toe correction	42	4 - 12
Coil springs (layout)	42	4 - 13
Wheels, tires	44	4 - 15
Suspension alignment	44	4 - 17
Brakes	47	4 - 20
Bleeding the brakes	47	4 - 23
ABS 5	45	4 - 24
Operation of the ABD	45	4 - 30
Diagnosis ABS/ABD	45	4 - 34
Body		
General		5 - 1
Constructional dimensions	50	5 - 4
Aerodynamics and air ducting	50	5 - 8
Body equipment		
Body equipment		6 - 1
Color scheme as of 1995 model year	60	6 - 1
Windows	64	6 - 8
Airbag system	68	6 - 14
Body - interior trim		
Body - interior trim	70	7 - 1
Seats	72	7 - 5
Heating, air conditioning, ventilation		
Particle filter	85	8 - 1
Air ducting	80	8 - 3
Heating - air conditioning unit	85	8 - 5
Heating - air conditioning unit	87	8 - 6
Series resistor of rear blower	80	8 - 9

	Rep. Gr.	Page
Electrical system		
Instruments	90	9 - 1
Alarm system/central locking system	90	9 - 3
Heated rear window	64	9 - 6
Central Information System (Z I)	91	9 - 7
Radio "Alpine 7807"	91	9 - 10
Sound package, DSP-System	91	
Windshield wiper and washer system	92	
Headlights	94	
Front end light cluster	94	
Tail lights	94	
Engine compartment baseplate	97	
Wiring diagram		
Summary		
Maintenance		0 - 1
Number ranges		0 - 4
Technical data		0 - 5

97 90 Support, left-hand engine compartment side

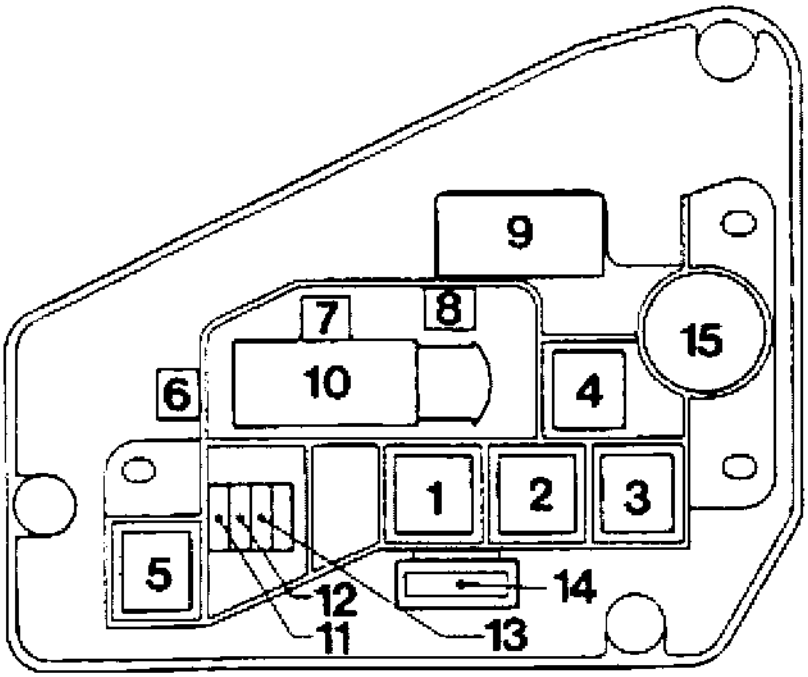

210

1 - Not used

2 - Relay, auxiliary air pump (USA/Canada only)

3 - Relay, AC compressor

4 - Relay, heated rear window

5 - Relay, heater blower

6 - Not used

7 - Connector, suppression capacitor

8 - Not used

9 - Connector, DME X 4/2, engine X3

10 - Connector, DME X 60

11 - Fuse, heater blower 30 A

12 - Fuse, rear window 25 A

13 - Fuse, AC compressor 7,5 A

14 - Fuse, auxiliary air pump 40 A

15 - Suppression capacitor

97 97 Support, ri ht-hand en ne ompartment side

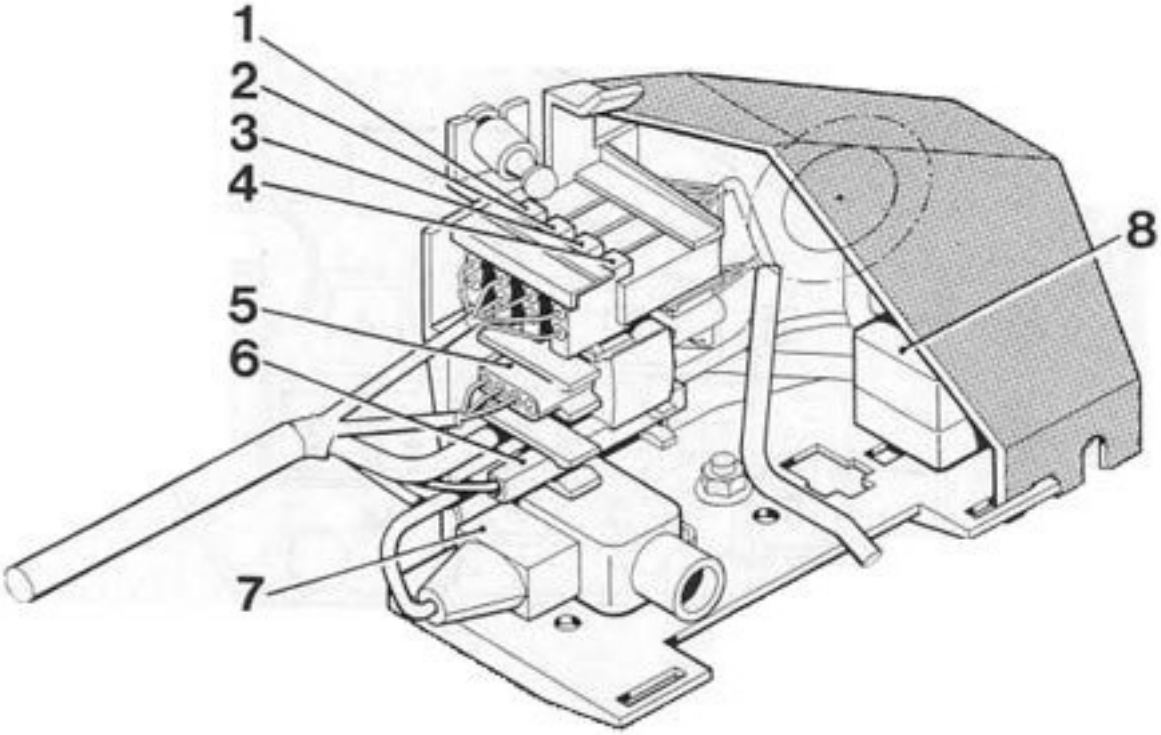

Oi level sender

Micro switc lock

T mperature sensor catalytic converte

Not

Oxyge senso CO potentiometer
vehicles fitted with catalytic converter)

AC compressor

CO potentiometer, lor hicle not fitted
with catalytic rte

Rea hts

97 09 Passenger compartment wiring harness

Only one wiring harness is supplied worldwide for service. The following modifications are therefore required when replacing the wiring harness:

LHD vehicles

1. Connect jumper adapter 928. 615. 125. 00 to relay base R 34 on the Central Electrical System (not for Japan and USA/Canada vehicles).
   The foglight relay is retained on Japan and USA/Canada vehicles.

2. Disconnect coding jumper (in front of speedometer) on vehicles with 72-liter tank (wire color orange).

3. On vehicles fitted with anti-drive-off feature (M 530), the wires (0.5 sq.mm br/gn) for the driver door (X 11/1, pin 12) and passenger door (X 12/1, pin 11) connections must be unlatched, cut off and insulated.

4. On Tiptronic vehicles **without anti-drive-off feature,** the yellow-black wire (0.75 sq.mm) for the DME connection (X 4/1, pin 13) must be unlatched and soldered to pin 2 along with the black wire (2.5 sq.mm) (i.e. both wires soldered to pin 2).

5. On manual transmission vehicles **without anti-drive-off feature,** the jumper adapter 964. 610. 184. 00 must be connected on the relay base R 61 of the Central Electrical System.

6. On vehicles **without four-wheel drive**, the brown wire (0.5 sq.mm) must be unlatched from connector II (white) of the Central Information System (pin 24) and insulated.

7. On vehicles **without sound package,** radio connector II (speaker wires) must be separated from the booster adapter (8-pin connector ahead of radio) and connected to the radio.

8. Instead of the buzzer (443. 951. 307 B) of the light reminder, the gong relay (928. 618. 102. 03) must be fitted (already fitted on USA / Canada and Saudi-Arabia vehicles)

RHD vehicles

1. Connect jumper adapter 928. 615. 125. 00 to relay base R 34 on the Central Electrical System (not for Japan and USA/Canada vehicles).
   The foglight relay is retained on Japan and USA/Canada vehicles.

2. On vehicles **without four-wheel drive,** the brown wire (0.5 sq.mm) must be unlatched from connector II (white) of the Central Information System (pin 24) and insulated.

3. On vehicles **without sound package,** radio connector II (speaker wires) must be separated from the booster adapter (8-pin connector ahead of radio) and connected to the radio.

97 09 41 Repairing the passenger compartment wiring harness

Note

The ABS and brake pad wear indicator combination wires are integral parts of the wiring harness. When repairing damaged sections, the integral wires can be cut off and replaced with repair wires.

The passenger compartment wiring harness includes the rear left and right wires.

Run the following operational checks after completing the repair:

ABS: Check with system tester 9288.

Brake pad wear indicator: The lamp must go dim when the engine is running, provided that the pads are in good condition.

Joints

The joints for disconnecting the wiring are located inside the emergency seat pan on the left and right-hand sides ahead of the wire exit towards the outside.

1. Disconnect battery.
2. Fold emergency seat backrests forward.
3. Remove rear panel trim.
4. Tie damping mat out of the way with a strip of self-adhesive tape.

Note

Undo soft top motors on cabriolet vehicles (4 bolts).

5. Starting at the rubber grommets, cut insulating hose open along a length of approx. 20 mm towards the right.
6. Remove PVC insulating tape.
7. Remove shrink-fit caps from joints.
8. Cut off connectors.
9. Remove combination wires.
10. Fit repair wires from wheel carriers towards seat pan.
11. Strip wires along a length of 10 mm.
12. Connect wires according to table with crimp connectors and standard crimping tool (A).

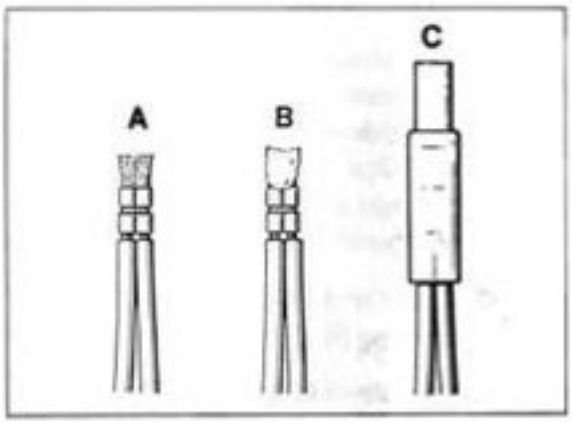

1316 - 97

Combination wire		Wiring harness
Color	Length	Color
		Rear left
br/sw	30 mm	br/sw
br/gn	60 mm	br/gn
br/ws	90 mm	ws*
br/bl	120 mm	shield
br	150 mm	br

* shielded wires

Combination wire		Wiring harness
Color	Length	Color
		Rear right
br/sw	30 mm	br/sw
br/gn	60 mm	br/gn
br/ws	90 mm	ge*
br/bl	120 mm	shield
br	150 mm	br

* shielded wires

br - brown
sw - black
ge - yellow
bl - blue
ws - white
gn - green

13. Solder wire tips after crimping (B).

14. Refit shrink-fit caps and shrink into place with hot air gun (C).

15. Wrap entire joint area with standard PVC tape.

Printed in Germany - VI.1994

97 16 41 Repairing the front-end wiring harness

1916 - 97

Note

The ABS and brake pad wear indicator combination wires are integral parts of the wiring harness. When repairing damaged sections, the integral wires can be cut off and replaced with repair wires.

The front-end wiring harness includes the front left and right wires.

Run the following operational checks after completing the repair:

ABS: Check with ABS tester.

Brake pad wear indicator: The lamp must go dim when the engine is running, provided that the pads are in good condition.

Joints

The joints for disconnecting the wiring are located on the right and left sides inside the luggage compartment above the side member near the strut towers.

Front right

1. Disconnect battery.
2. Remove right-hand front wheel
3. Remove rear wheel housing liner.
4. Undo tie-wrap in wheel housing area.
5. Undo tie-wrap in luggage compartment.

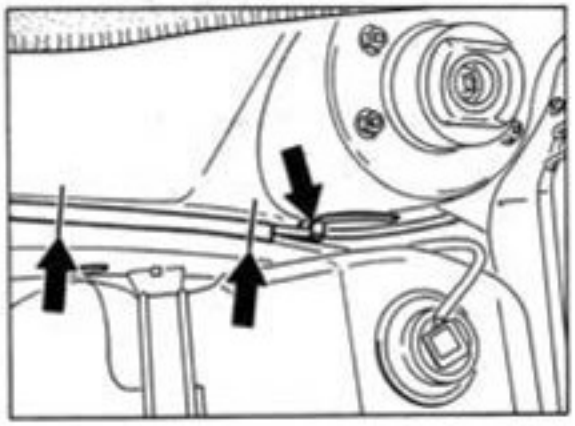

6. Cut insulating hose open at the wiring harness.
7. Remove PVC insulating tape.
8. Remove shrink-fit caps from joints.
9. Cut off connectors.
10. Remove combination wire.
11. Fit repair wire.
12. Strip wire along a length of 10 mm.
13. Connect wires according to table with crimp connectors and standard crimping tool (A).

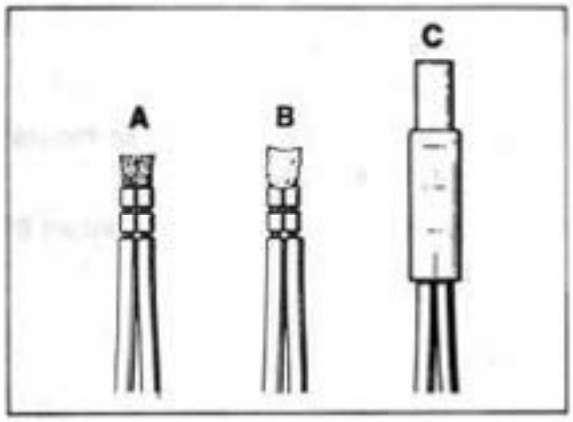

Combination wire		Wiring harness
Color	Length	Color
		Front right
br/sw	30 mm	br/sw
br/gn	60 mm	br/gn
br/ws	90 mm	gn*
br/bl	120 mm	shield
br	150 mm	br

* shielded wire

br - brown
sw - black
bl - blue
ws - white
gn - green

14. Solder wire tips after crimping (B).

15. Refit shrink-fit caps and shrink into place with hot air gun (C).

16. Wrap entire joint area with standard PVC tape.

Front left

1. Disconnect battery.

2. Remove left-hand front wheel

3. Remove rear wheel housing liner.

4. Undo tie-wrap in wheel housing area.

5. Remove bracket for brake fluid reservoir.

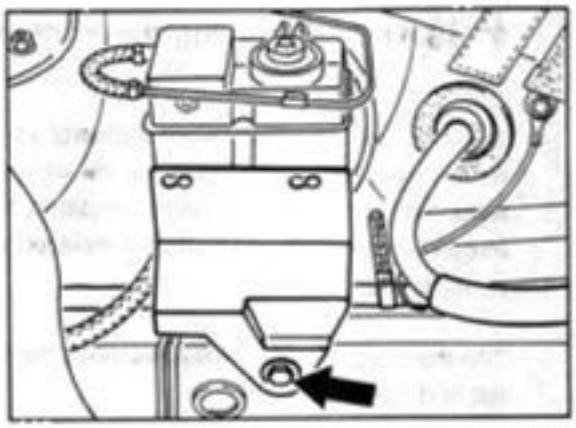

1917 - 97

6. Undo tie-wrap in luggage compartment.

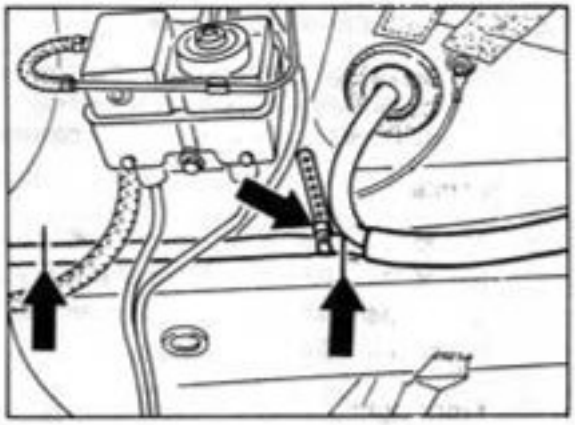

7. Cut insulating hose open at the wiring harness.

8. Remove PVC insulating tape.

9. Remove shrink-fit caps from joints.

10. Cut off connectors.

11. Remove combination wire.

12. Fit repair wire.

13. Strip wires along a length of 10 mm.

14. Connect wires according to table with crimp connectors and standard crimping tool (A).

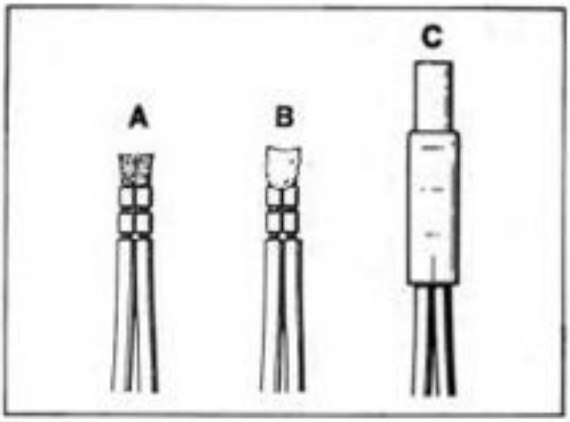

Combination wire		Wiring harness
Color	Length	Color
		Front left
br/sw	30 mm	br/sw
br/gn	60 mm	br/gn
br/ws	90 mm	rt*
br/bl	120 mm	shield
br	150 mm	br

* shielded wire

br - brown
sw - black
rt - red
bl - blue
ws - white
gn - green

15. Solder wire tips after crimping (B).

16. Refit shrink-fit caps and shrink into place with hot air gun (C).

17. Wrap entire joint area with standard PVC tape.

97 09 Spare part - passenger compartment wire harness for Model '95

World-wide, 8 wire harnesses are available as spare parts. When using this wire harness, the following modifications must therefore be made:

Left-hand drive vehicles, model '95

1. Insert jumper adapter 964.610.184.00 in relay socket R 34 on the central electrical system (not for Japan and USA/Canada vehicles).
   On Japan and USA/Canada vehicles, the foglight relay remains in position.

2. On Tiptronic vehicles **without immobilizer,** the wire (0.75 mm^2 yellow/black) on the immobilizer relay (R 61), pin 7, must be cut off about 80 mm ahead of the relay socket. The lead from relay pin 7 must then be crimped to the lead (4 mm^2, yellow) from pin 3 (double connection).
   See wiring diagram - section N 49 line (0.75 mm^2 yellow) "M 249 not M 530"

3. On manual vehicles **without immobilizer**, jumper adapter 964.610.184.00 must be inserted in relay socket R 61 on the central electrical system.

4. On vehicles **with immobilizer**, the lead (0.5 mm^2 orange/black) at connector X 4/2 pin 12 (double connection), must be cut off at the contact, insulated and tied up.

5. On vehicles **without four-wheel drive**, the lead (0.5 mm^2 brown) from connector II (white) on the central informer (Pin 24) must be unclipped and insulated.

6. On vehicles with small fuel tanks (approx. 71 l) the lead (0.5 mm^2 orange/black) from connector II (white) on the central informer (pin 26) must be unclipped and insulated.

7. On vehicles without **sound package**, radio connector II (loudspeaker lines) must be disconnected from the booster adapter (8-pin connector ahead of radio) and connected to the radio.

8. Instead of the buzzer (443.951.307 B) for the light warning, the gong relay (928.618.102.03) must be installed (already installed on vehicles for USA/Canada and Saudi Arabia).

97 09 Spare part - passenger compartment wire harness for Model '95

World-wide, 8 wire harnesses are available as spare parts. When using this wire harness, the following modifications must therefore be made:

Right-hand drive vehicles, model '95

1. Insert jumper adapter 964.610.184.00 in relay socket R 34 on the central electrical system.
   (not for Japan and USA/Canada vehicles).
   On Japan and USA/Canada vehicles, the foglight relay remains in position.

2. On Tiptronic vehicles **without immobilizer,** the wire (0.75 mm^2 yellow/black) on the immobilizer relay (R 61), pin 7, must be cut off about 80 mm ahead of the relay socket.
   The lead from relay pin 7 must then be crimped to the lead (4 mm^2, yellow) from pin 3 (double connection).
   See wiring diagram - section N 49 line (0.75 mm^2 yellow) "M 249 not M 530"

3. On manual vehicles **without immobilizer**, jumper adapter 964.610.184.00 must be inserted in relay socket R 61 on the central electrical system.

4. On vehicles **with immobilizer**, the lead (0.5 mm^2 orange/black) at connector X 4/2 pin 12 (double connection), must be cut off at the contact, insulated and tied up.

5. On vehicles **without four-wheel drive**, the lead (0.5 mm^2 brown) from connector II (white) on the central informer (Pin 24) must be unclipped and insulated.

6. On vehicles without **sound package**, radio connector II (loudspeaker lines) must be disconnected from the booster adapter (8-pin connector ahead of radio) and connected to the radio.

7. On vehicles **with sound package**, channels VR and VL and channels HR and HL must be interchanged at radio connector II (socket contact).
   1.5 mm^2 brown/black (Pin 6) must be interchanged with
   1.5 mm^2 brown/white (Pin 4)

   1.5 mm^2 black (Pin 5) must be interchanged with
   1.5 mm^2 white (Pin 3)

   1.5 mm^2 brown/red (Pin 2) must be interchanged with
   1.5 mm^2 brown/yellow (Pin 8)

   1.5 mm^2 red (Pin 1) must be interchanged with
   1.5 mm^2 yellow (Pin 7)

97 50 41 Repairing wire harness no. 173 (DME)

Note

As of model year 1996, knock sensors, speed senders and temperature sensors with optimized plug connections will be installed. In this case, the connector housing of older wire harnesses must be modified.

1. Cut wires right next to the old connector housing.

2. Push new sheaths onto each individual wire and insulate wires on a length of approx. 5 mm.

3. Use a crimping tool to crimp the connector contact and the sheath.

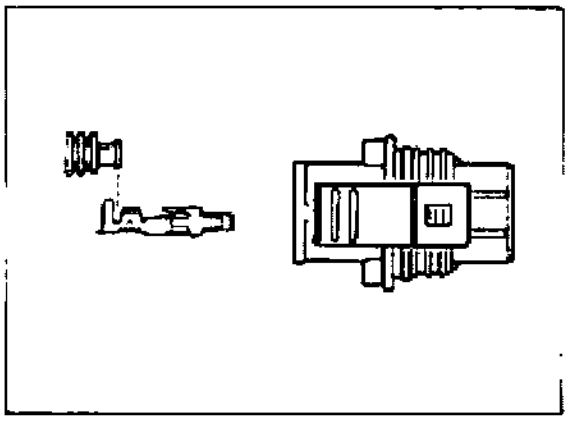

2309-97

4. As for the terminal assignment in the connector housing, the wiring diagram and the following table must be observed.

Knock sensors 1 and 2

Term. 1 - WS (white)
Term. 2 - BR (brown)
Term. 3 - Sheath

Speed sender

Term. 1 - WS (white)
Term. 2 - BR (brown)
Term. 3 - Sheath

Engine temperature sensor (NTC II)

Term. 1 - SW/RT (black/red)
Term. 2 - Dummy plug
Term. 3 - BR (brown)

5. Terminal 2 on the temperature sensor is not used and has to be fitted with a dummy plug.

Note

These optimized parts can also be installed in the 911 Carrera (964) as of model year 1989. The old connector housings of the DME wire harness must be replaced.

97 52 Engine wire harness

Note

The injection valves for cylinders 1 to 6 are no longer marked on the wire harness. Assignment is now based on the different colors of the connector housings.

Cylinder	Color of connector housing
1 and 4	white
2 and 5	brown
3 and 6	blue

97 09 Spare part - passenger compartment wire harness for Model '96

Remark

On Cabriolet and Targa vehicles, removing or installing the cable for the interior light and the passenger compartment monitoring sensor **below the A-pillar is impossible with the windshield installed.** In this case, cut off the passenger compartment wire harness (marked with yellow adhesive tape) before the instruments and as close to the main wire harness as possible.

When installing a new passenger compartment wire harness, cut off the wires behind the yellow adhesive tape and connect them to the vehicle's wires of the same color by soldering or crimping. Then insulate the wires thoroughly. New passenger compartment wire harness delivered by After-Sales always include lines for the passenger compartment monitoring system. Insulate these wires thoroughly if they are not used.

If the windshield has been removed or if the wire harness is installed in the A-pillar on vehicles without passenger compartment monitoring, cut off the 6-pin plug connection in the cutout for the light in the windshield frame. Then fit a flat receptacle N 17 480.5 and an insulating bushing 111.971.921 B to the brown, the brown/white and the red wire and connect these wires to the interior light. Insulate the yellow/red wire and the yellow/black wire thoroughly and tie them to the wire harness using tie-wraps.

Left-hand drive vehicles, model '96

1. Insert jumper adapter 964.610.184.00 in relay socket R 34 on the central electrical system (not for Japan and USA/Canada vehicles).
   On Japan and USA/Canada vehicles, the foglight relay remains in position.

2. On Tiptronic vehicles **without immobilizer,** the wire (0.75 mm^2 yellow/black) on the immobilizer relay (R 61), pin 7, must be cut off about 80 mm ahead of the relay socket.
   The lead from relay pin 7 must then be crimped to the lead (4 mm^2, yellow) from pin 3 (double connection).
   See wiring diagram - section N 49 line (0.75 mm^2 yellow) "M 249 not M 530"

3. On manual vehicles **without immobilizer**, jumper adapter 964.610.184.00 must be inserted in relay socket R 61 on the central electrical system.

4. On vehicles **with immobilizer**, the lead (0.5 mm^2 orange/black) at connector X 4/2 pin 12 (double connection), must be cut off at the contact, insulated and tied up.

5. On vehicles **without four-wheel drive**, the lead (0.5 mm^2 brown) from connector II (white) on the central informer (Pin 24) must be unclipped and insulated.

6. On vehicles with small fuel tanks (approx. 71 l) the lead (0.5 mm^2 orange/black) from connector II (white) on the central informer (pin 26) must be unclipped and insulated.

7. On vehicles without **sound package**, radio connector II (loudspeaker lines) must be disconnected from the booster adapter (8-pin connector ahead of radio) and connected to the radio.

8. Instead of the buzzer (443.951.307 B) for the light warning, the gong relay (928.618.102.03) must be installed (already installed on vehicles for USA/Canada and Saudi Arabia).

97 09 Spare part - passenger compartment wire harness for Model '96

Right-hand drive vehicles, model '96

1. Insert jumper adapter 964.610.184.00 in relay socket R 34 on the central electrical system.
   (not for Japan and USA/Canada vehicles).
   On Japan and USA/Canada vehicles, the foglight relay remains in position.

2. On Tiptronic vehicles **without immobilizer,** the wire (0.75 mm^2 yellow/black) on the immobilizer relay (R 61), pin 7, must be cut off about 80 mm ahead of the relay socket.
   The lead from relay pin 7 must then be crimped to the lead (4 mm^2, yellow) from pin 3 (double connection).
   See wiring diagram - section N 49 line (0.75 mm^2 yellow) "M 249 not M 530"

3. On manual vehicles **without immobilizer**, jumper adapter 964.610.184.00 must be inserted in relay socket R 61 on the central electrical system.

4. On vehicles **with immobilizer**, the lead (0.5 mm^2 orange/black) at connector X 4/2 pin 12 (double connection), must be cut off at the contact, insulated and tied up.

5. On vehicles **without four-wheel drive**, the lead (0.5 mm^2 brown) from connector II (white) on the central informer (Pin 24) must be unclipped and insulated.

6. On vehicles without **sound package**, radio connector II (loudspeaker lines) must be disconnected from the booster adapter (8-pin connector ahead of radio) and connected to the radio.

7. On vehicles **with sound package**, channels VR and VL and channels HR and HL must be interchanged at radio connector II (socket contact).
   1.5 mm^2 brown/black (Pin 6) must be interchanged with
   1.5 mm^2 brown/white (Pin 4)

   1.5 mm^2 black (Pin 5) must be interchanged with
   1.5 mm^2 white (Pin 3)

   1.5 mm^2 brown/red (Pin 2) must be interchanged with
   1.5 mm^2 brown/yellow (Pin 8)

   1.5 mm^2 red (Pin 1) must be interchanged with
   1.5 mm^2 yellow (Pin 7)

97 09 Spare part - passenger compartment wire harness for Model '96

Note

Supplement to Spare part-passenger compartment wire harness for Model '96, on Page 97 - 015 for left-hand drive vehicles or Page 97 - 016 for right-hand drive vehicles.

Left-hand drive vehicles, '96 model

1. In general, all unneeded tie-outs and connectors must be carefully tied in and secured against rattling when replacement harnesses are used.

2. On **Targa vehicles with telephone** (M615), the telephone antenna must be subsequently pulled through the central electrical system flange (toward luggage compartment). Excess length is accommodated in front of right-hand A-pillar.

3. On **Coupe vehicles with naturally aspirated engine**, the tie-out for the interior light and passenger compartment monitoring (left-hand A-pillar for Targa) must be tied back or cut off and insulated.

4. On **Targa vehicles**, the sliding-roof switch plug (2.5 sq. mm wire) – or the two plugs for glass roof and roller sun blind (each 3 x 0.5 sq. mm wire) on Coupe vehicles – must be tied back and secured against rattling.

5. Tie back excess length at rear spoiler switch (required on Targa with rear window wiper) if not used.

6. On **Coupe vehicles**, the excess length must be carefully tied back at the rear-wiper motor.

7. On **UST vehicles**, the rear-spoiler tie-out must be tied back at the right in the engine compartment.

8. On **Targa vehicles with manual transmission for the USA**, the two tied-in wires 0.5 YE/BK and 0.5 YE/RD on plug II of the alarm system control module must be swapped with the two wires of the same colour in ports II 24 and II 8.

9. On **Coupe and Targa vehicles with naturally aspirated engines for the USA**, the combination wire (ABS - BVA) must be routed through the heel plate at the rear left instead of through the seat well (like Turbo). Close off seat well bore with the old wiring harness grommet and sealant.

10. On **RS vehicles** (M003) with battery disconnection switch, the tied-in red 2.0 sq. mm wire must be swapped with the wire of the same colour at terminal 30 in the plug of the hazard warning light switch. Cut off contact at former wire and carefully insulate and tie in the wire.

11. On **UST vehicles** with large tank (90 l = M 545), the wire (0.5 BN) must be disconnected from pin 26 of plug II (white) in the central information system and insulated.

Right-hand drive vehicles, '96 model

1. In general, all unneeded tie-outs and connectors must be carefully tied in and secured against rattling when replacement harnesses are used.

2. On **Coupe vehicles with naturally aspirated engine**, the tie-out for the interior light and passenger compartment monitoring (left-hand A-pillar for Targa) must be tied back or cut off and insulated.

3. On **Targa vehicles**, the sliding-roof switch plug (2.5 sq. mm wire) – or the two plugs for glass roof and roller sun blind (each 3 x 0.5 sq. mm wire) on Coupe vehicles – must be tied back and secured against rattling.

4. Tie back excess length at rear spoiler switch (required on Targa with rear-window wiper) if not used.

5. On **Coupe vehicles**, the excess length must be carefully tied back at the rear-wiper motor.

6. On **UST vehicles**, the rear-spoiler tie-out must be tied back at the right in the engine compartment.

7. On **Targa vehicles with manual transmission for the USA**, the two tied-in wires 0.5 YE/BK and 0.5 YE/RD on plug II of the alarm system control module must be swapped with the two wires of the same colour in ports II 24 and II 8.

8. On **Coupe and Targa vehicles with naturally aspirated engine for the USA**, the combination wire (ABS - BVA) must be routed through the heel plate at the rear left instead of through the seat well (like Turbo). Close off seat well bore with the old wiring harness grommet and sealant.

9. On **RS vehicles** (M003) with battery disconnection switch, the tied-in red 2.0 sq. mm wire must be swapped with the wire of the same colour at terminal 30 in the plug of the hazard warning light switch. Cut off contact at former wire and carefully insulate and tie in the wire.

97 09 Spare part - passenger compartment wire harness for Model '97

Note

All conversion work described on Pages 97 - 015 to 97 - 018 for the spare part - passenger compartment wire harness for Model '96 also must be performed on the spare part - passenger compartment wire harness for Model '97. Four further conversion work steps are necessary for the model year '97.

Left-hand drive vehicles, '97 model

1. On **vehicles with DSP** (M680), the wire 0.5 WT/RD must be removed from port 1 of radio plug A (black) and insulated.

2. On **vehicles with telephone** (M615 or M618) in combination with sound package, the 2-pole connection wire BU and BU/BN in the centre console is connected to the amplifier instead of the loudspeaker.

3. On **LHD UST vehicles** (not 553), the plug interlock must be cut off and the two wires BN and BN/WT crimped or soldered together. Then insulate them carefully and tie in (starter function!!).

Right-hand drive vehicles, '97 model

1. On **vehicles with DSP** (M680), the wire 0.5 WT/RD must be removed from port 1 of radio plug A (black) and insulated.

Wiring Diagram Type 911 Carrera (993) Model 95

	Coordinates	
Sheet 1	1 - 10	Lights
Sheet 2	11 - 20	Alarm System, Central Locks, Mirror, Power Window Regulator, Inside Lights
Sheet 3	21 - 30	Heater, AC, Coolant Fan, Rear Window Defogger
Sheet 4	31 - 40	ABS, ABD
Sheet 5	41 - 50	Motor, Ignition, Cruise Control
Sheet 6	51 - 60	Instruments, Sensor, Central Informer, On-board computer
Sheet 7	61 - 70	Seats
Sheet 8	71 - 80	Rear Spoiler, Two-Tone Horns, Wipe- and Wash Cleaners, Sun Roof, Convertible Top
Sheet 9	81 - 90	Radio, Telephone
Sheet 10	91 - 100	Fog Light, Rear Fog Light
Sheet 11		Central Electric
Sheet 12	111 - 120	Airbag
Sheet 13	121 - 130	Tiptronic
Sheet 14	131 - 140	Ground Points
Sheet 15		Construction Components
Sheet 16		Plug Connections, M-Numbers, Abbreviations
Sheet 17	141 - 150	Code Lock

Wiring Diagram Type 911 Carrera (993) Model 95

The wiring diagram consists of 14 *individual wiring diagrams*, 1 sheet *construction components*, 1 sheet *plug connections* and 1 sheet *ground points*. These are divided into coordinate fields.

Each individual wiring diagram contains a part of the central-electrics box in a dashdotted frame.

This part of the central-electrics box shows all the lines and relays necessary for the individual wiring diagram.

The earth/ground points are identified by "GP" and their location is shown in a vehicle diagram.

The 10-pin connectors on the central-electrics box are clipped together out of 3 parts, the 20-pin connectors are clipped together out of 5 parts.

Part 1, with the moduled-on fastening lug, is the "starting element".

Parts 2,3 and 4 are "module elements".

The 10-pin connectors only contents one "module element".

Start- and module elements are identified by the numbers 1.....5.

Part 5 ist a "coding element".

The designations of the plug connections in the wiring diagram refer to the "starting element" from, for example, A 11.....15, and to the first module element from A 21.....25.

The connectors are identified by an X and a number.

Wherever wires branch to another page, the coordinates and, in certain cases, the terminal markings are indicated.

The input and output signals of control units are indicated by arrows.

The feed wire of wire joints is indicated by an arrow.

Printed in Germany – II, 1993

Wiring Diagram 911 Carrera (993) Model 95/2

	Coordinates	
Sheet 1	1 - 10	
Sheet 2	11 - 20	Alarm System, Central Locks, Mirror, Power Window Regulator, Inside Lights
Sheet 3	21 - 30	Heater, AC, Coolant Fan, Rear Window Defogger
Sheet 4 A	31 - 40	
Sheet 4 B	31 - 40	ABS (RS)
Sheet 5 A	41 - 50	Motor, Ignition, Cruise Control
Sheet 6	51 - 60	Instruments, Sensor, Central Informer, On-board computer
Sheet 7	61 - 70	
Sheet 8	71 - 80	Rear Spoiler, Two-Tone Horns, Wipe- and Wash Cleaners, Sun Roof, Convertible Top
Sheet 9	81 - 90	Radio, Telephone
Sheet 10	91 - 100	Fog Light, Rear Fog Light
Sheet 11	101 - 110	Code Lock
Sheet 12	111 - 120	Airbag
Sheet 13	121 - 130	Tiptronic
Sheet 14	131 - 140	Ground Points
Sheet 15		Construction Components
Sheet 16		Plug Connections, M-Numbers, Abbreviations
Sheet 17		Central Electric

For vehicles with V.I.N.s from WP0 AA2 99 1SS3 21454 and from WP0 CA2 99 8SS3 41225

Wiring Diagram 911 Carrera (993) Model 95/2

The wiring diagram consists of 15 *individual wiring diagrams*, 1 sheet *construction components*, 1 sheet *plug connections* and 1 sheet *ground points*. These are divided into coordinate fields.

Each individual wiring diagram contains a part of the central-electrics box in a dashdotted frame.

This part of the central-electrics box shows all the lines and relays necessary for the individual wiring diagram.

The earth/ground points are identified by "GP" and their location is shown in a vehicle diagram.

The 10-pin connectors on the central-electrics box are clipped together out of 3 parts, the 20-pin connectors are clipped together out of 5 parts.

Part 1, with the moduled-on fastening lug, is the "starting element".

Parts 2,3 and 4 are "module elements".

The 10-pin connectors only contents one "module element".

Start- and module elements are identified by the numbers 1 .5.

Part 5 ist a "coding element".

The designations of the plug connections in the wiring diagram refer to the "starting element" from, for example, A 11.....15, and to the first module element from A 21.....25.

The connectors are identified by an X and a number.

Wherever wires branch to another page, the coordinates and, in certain cases, the terminal markings are indicated.

The input and output signals of control units are indicated by arrows.

The feed wire of wire joints is indicated by an arrow.

911 Carerra (993) MODEL 95/2 SHEET 1

LIGHTS

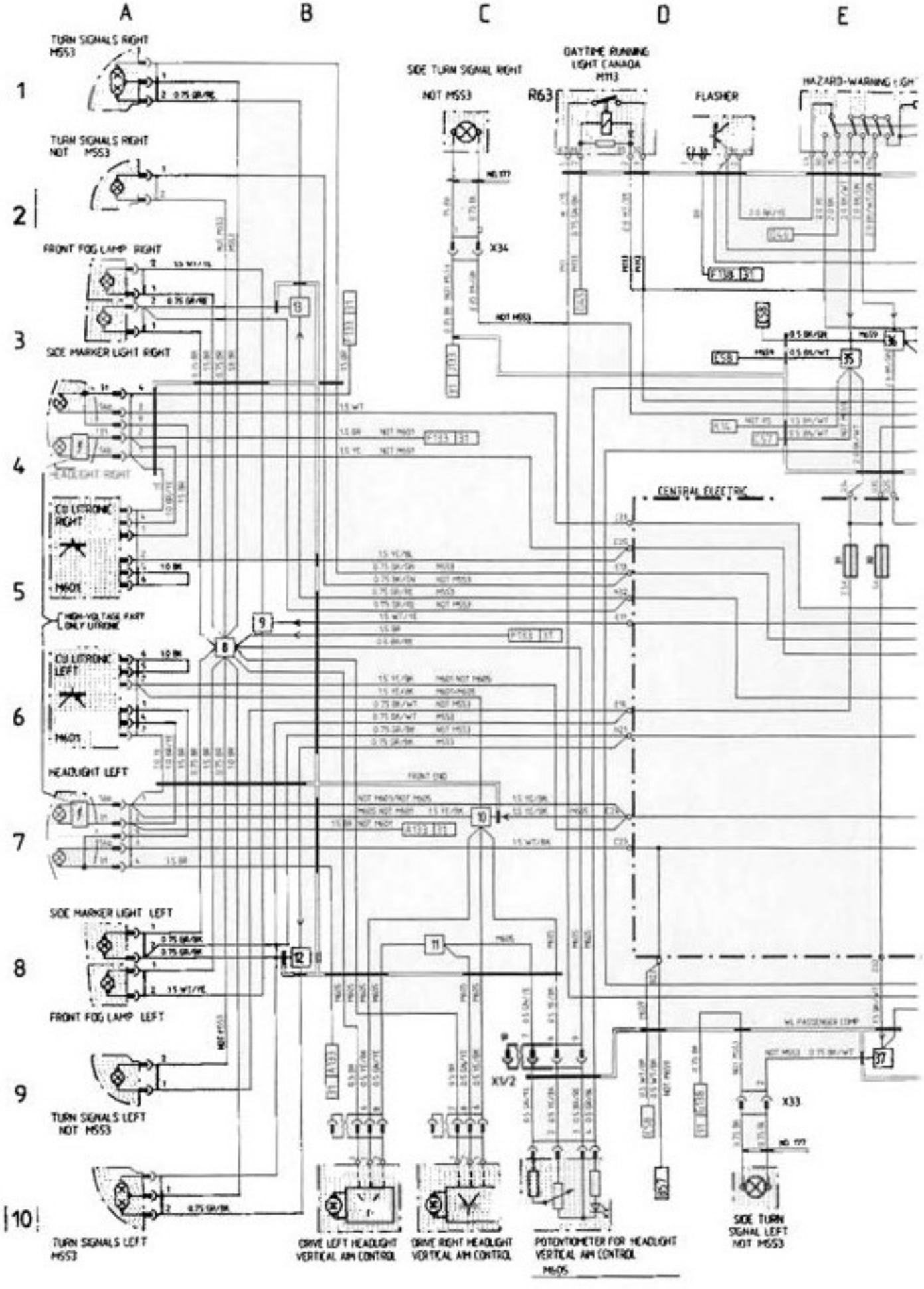

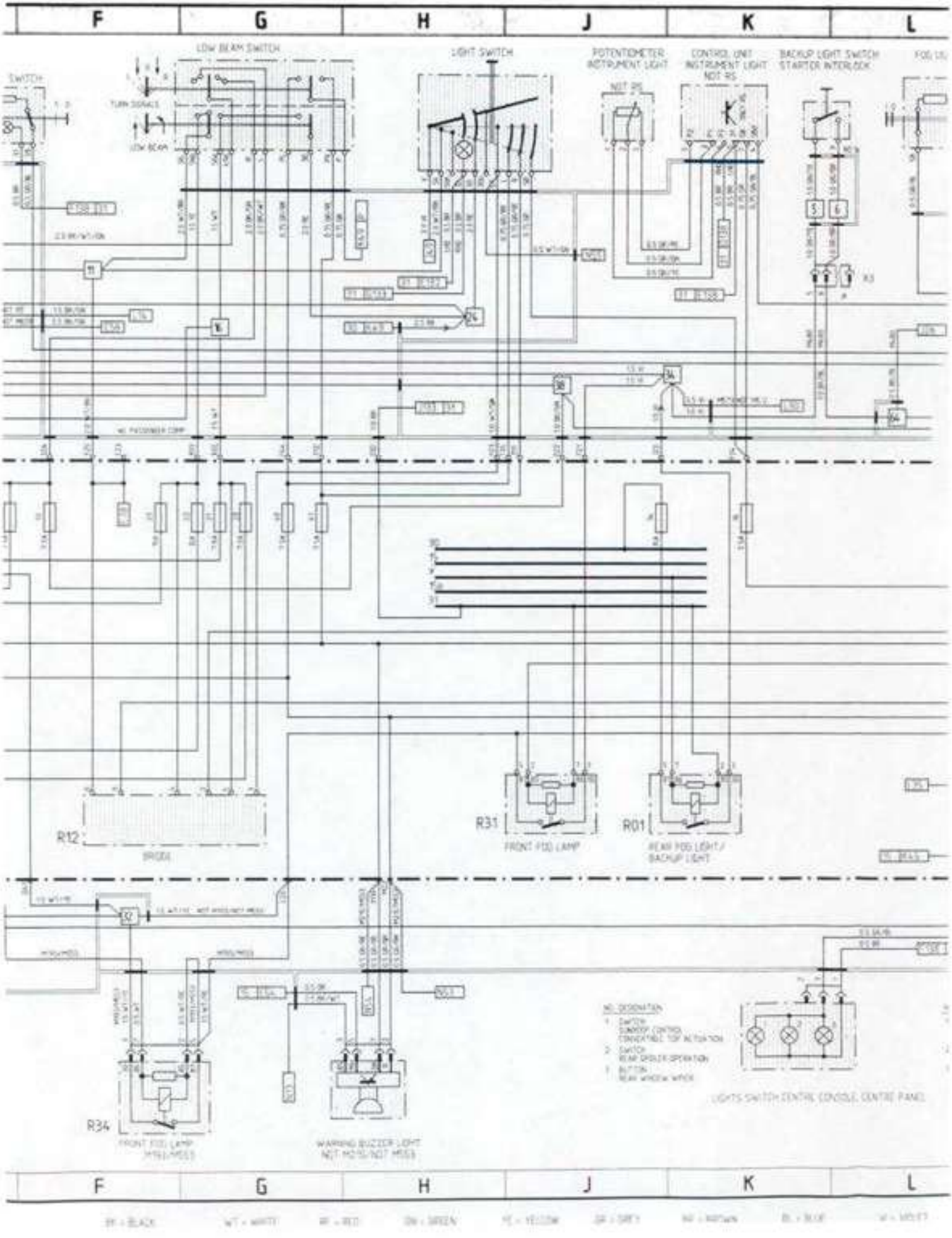
F
G
H
J
K
L
LOW BEAM SWITCH
LIGHT SWITCH
POTENTIOMETER INSTRUMENT LIGHT
CONTROL UNIT INSTRUMENT LIGHT NOT RS
BACKUP LIGHT SWITCH STARTER INTERLOCK
SWITCH
TURN SIGNALS
LOW BEAM
R12
BRIDGE
R31
FRONT FOG LAMP
R01
REAR FOG LIGHT / BACKUP LIGHT
R34
FRONT FOG LAMP
WARNING BUZZER LIGHT
NO. DESIGNATION
LIGHTS SWITCH CENTRE CONSOLE, CENTRE PANEL

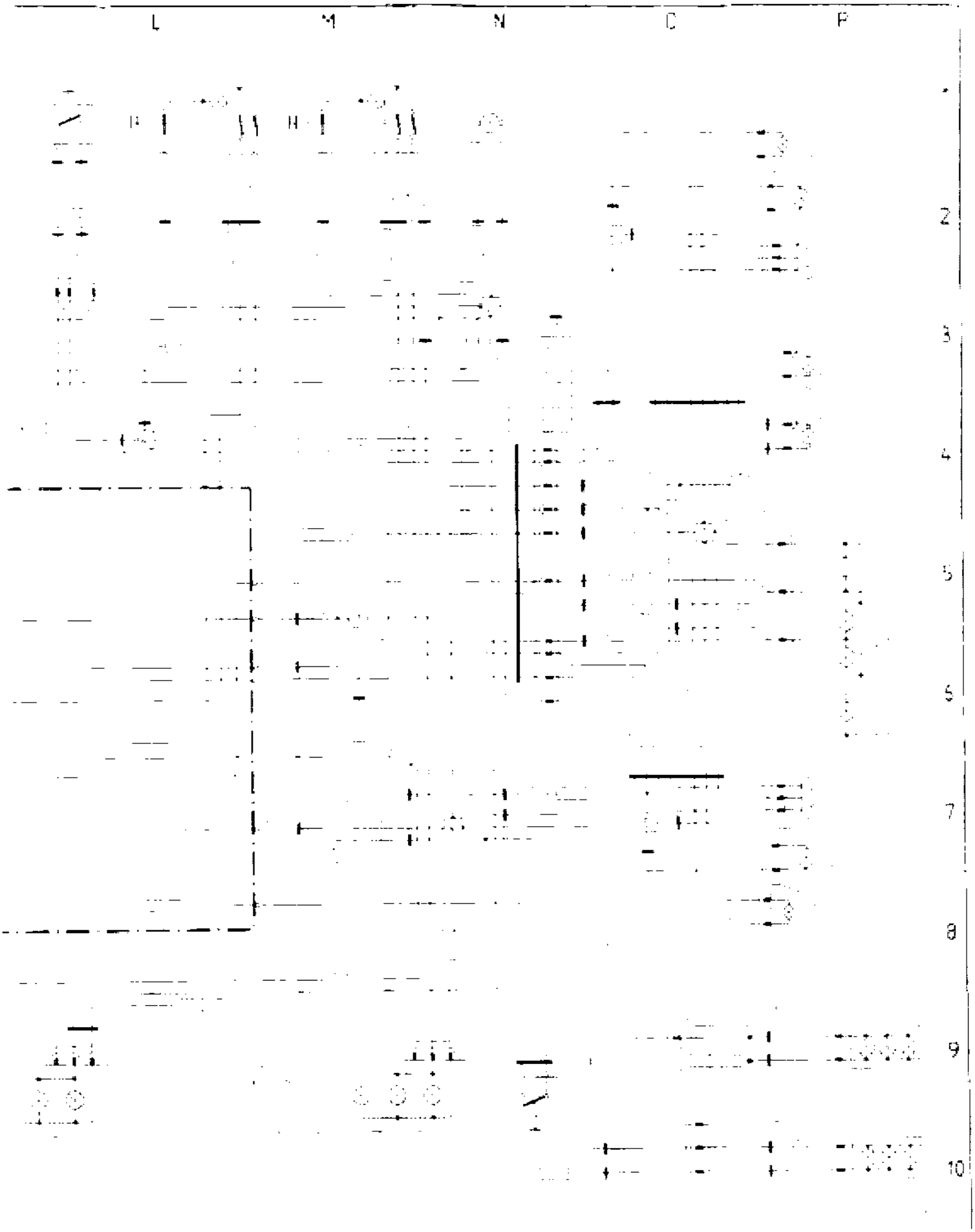
L
M
N
O
P
2
3
4
5
6
7
8
9
10

911 Carrera (993) MODEL 95/2 SHEET 2

SEATS, ALARM SYSTEM, CENTRAL LOCKS, MIRROR, POWER WINDOW REGULATOR, INSIDE LIGHTS

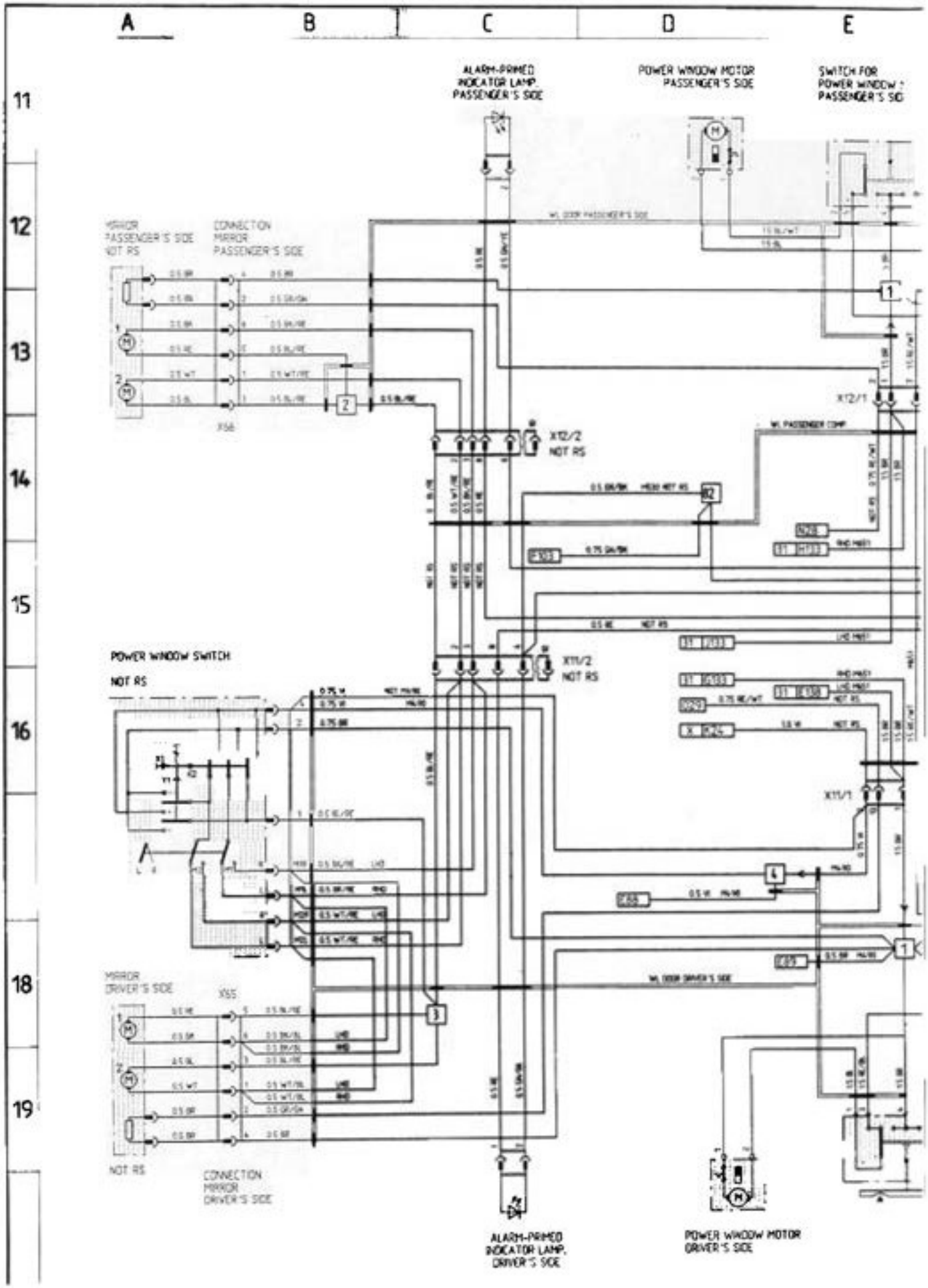

CONTROL UNIT ALARM SYSTEM/CENTRAL LOCKING S

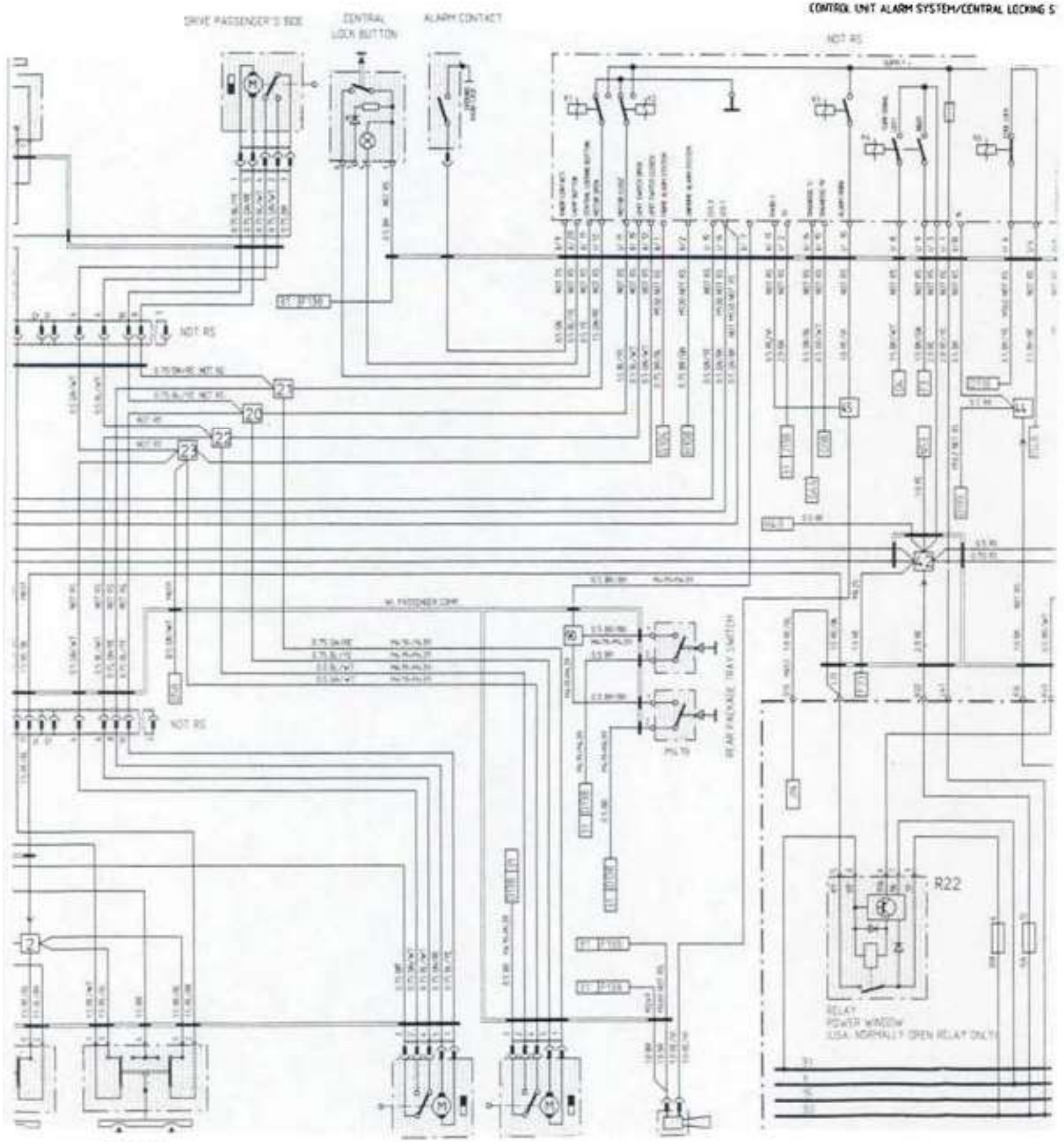

BK = BLACK WT = WHITE RE = RED GN = GREEN YE = YELLOW GR = GREY BR = BROWN BL = BLUE VI = VIOLE

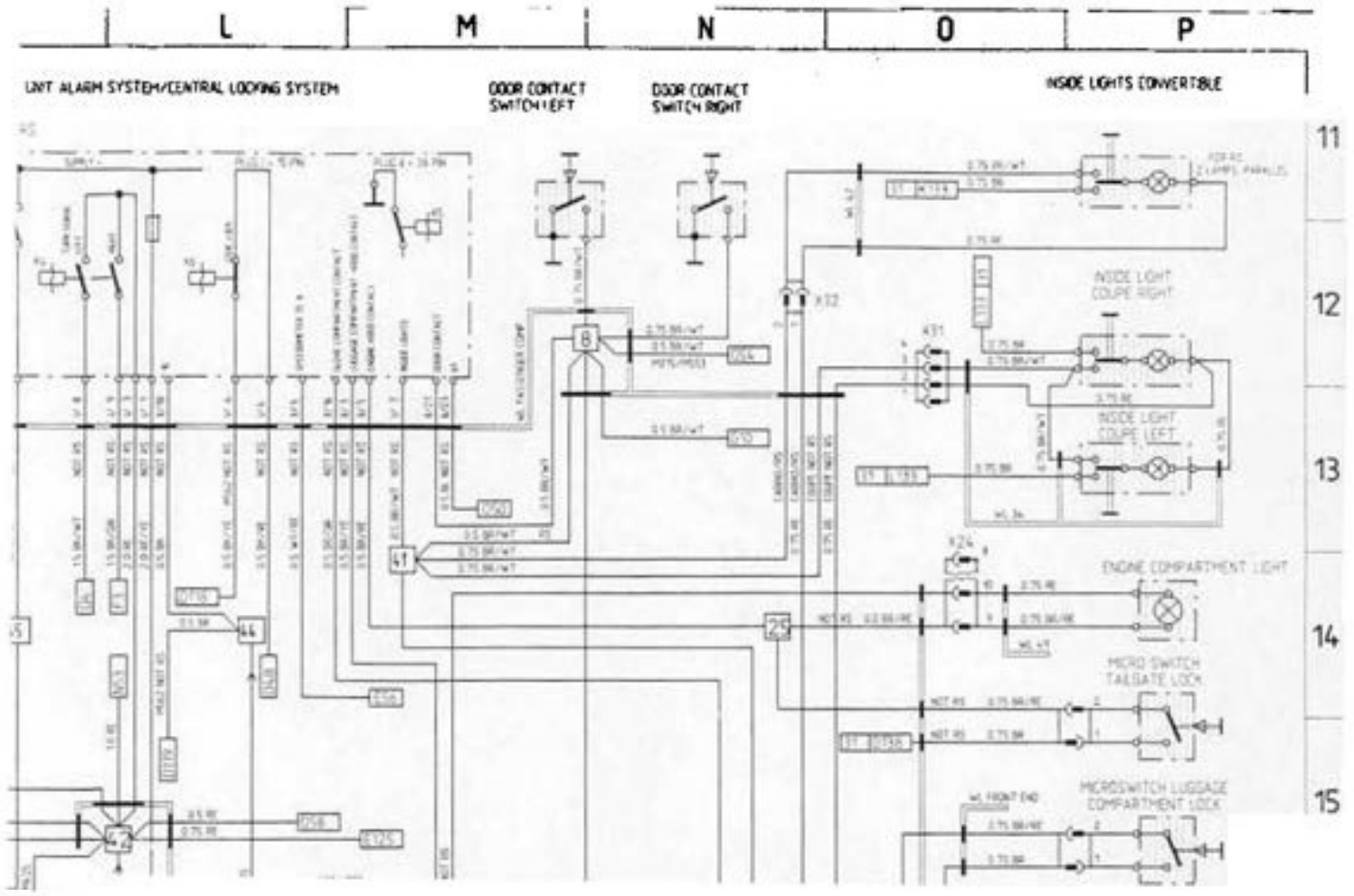
L
M
N
O
P
UNIT ALARM SYSTEM/CENTRAL LOCKING SYSTEM
DOOR CONTACT SWITCH LEFT
DOOR CONTACT SWITCH RIGHT
INSIDE LIGHTS CONVERTIBLE
11
12
13
14
15
INSIDE LIGHT COUPE RIGHT
INSIDE LIGHT COUPE LEFT
ENGINE COMPARTMENT LIGHT
MICRO SWITCH TAILGATE LOCK
MICROSWITCH LUGGAGE COMPARTMENT LOCK

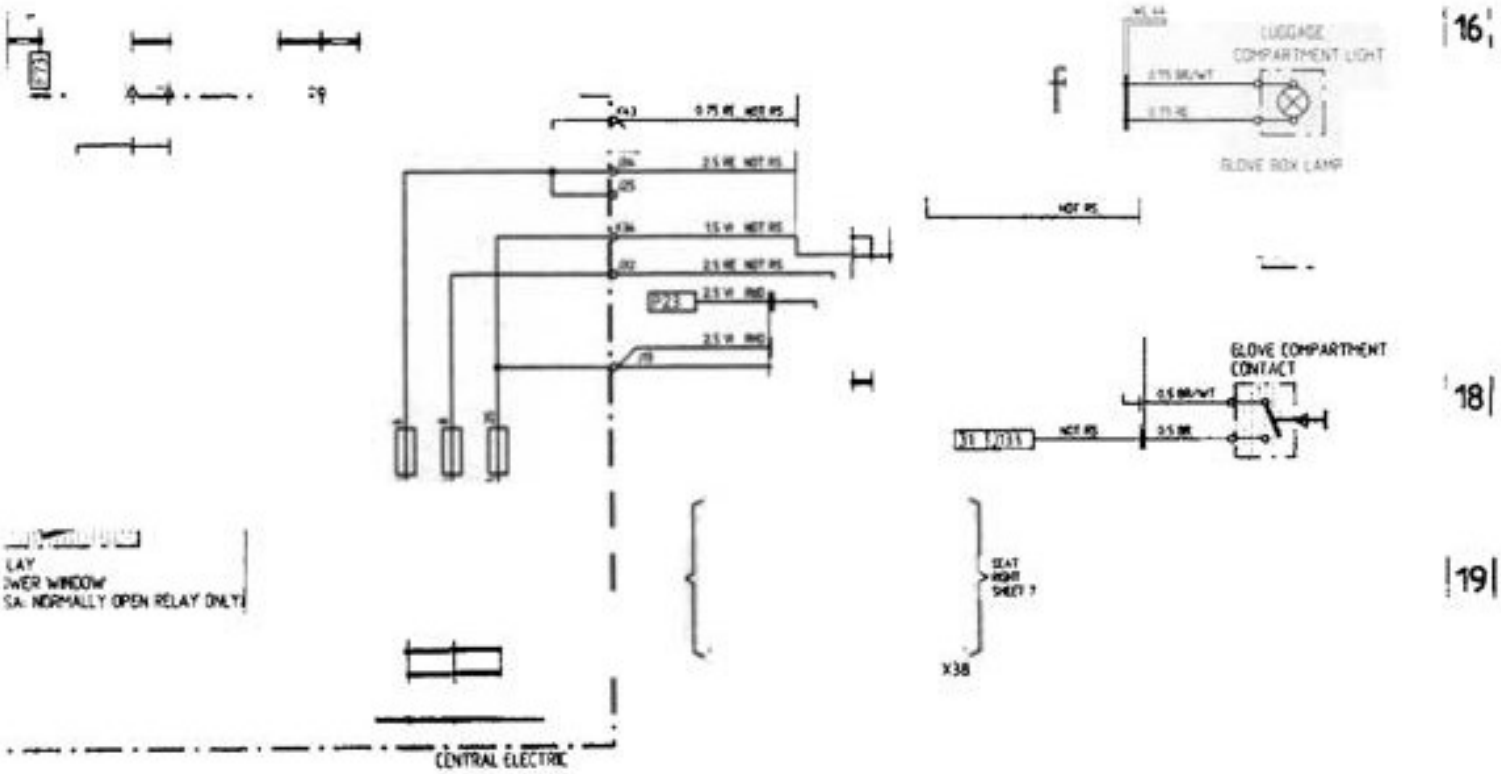
16
LUGGAGE COMPARTMENT LIGHT
GLOVE BOX LAMP
GLOVE COMPARTMENT CONTACT
18
19
SEAT RIGHT SHEET 7
X38
CENTRAL ELECTRIC

911 Carrera (993) MODEL 95/2 SHEET 3

HEATER / AC

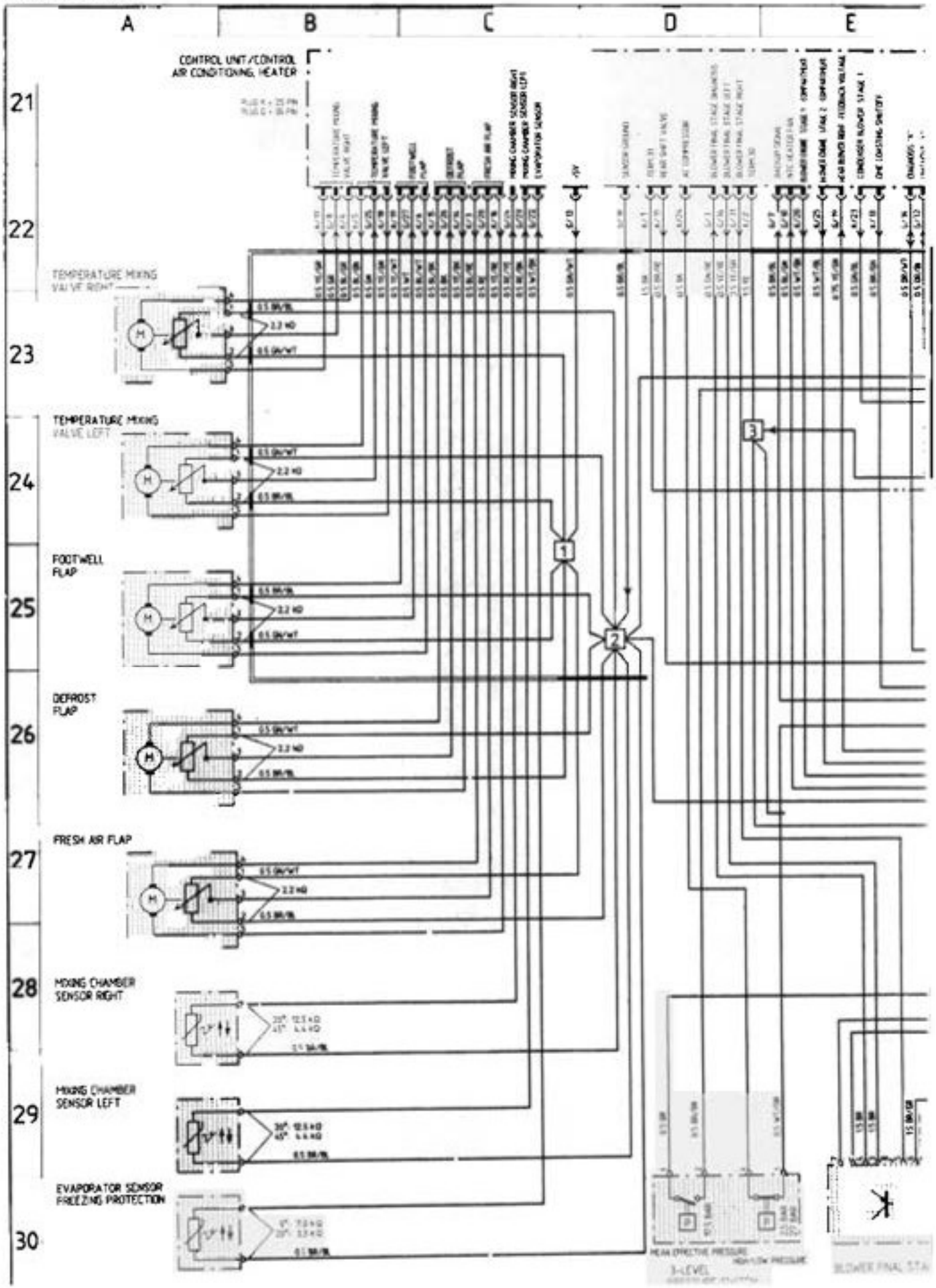

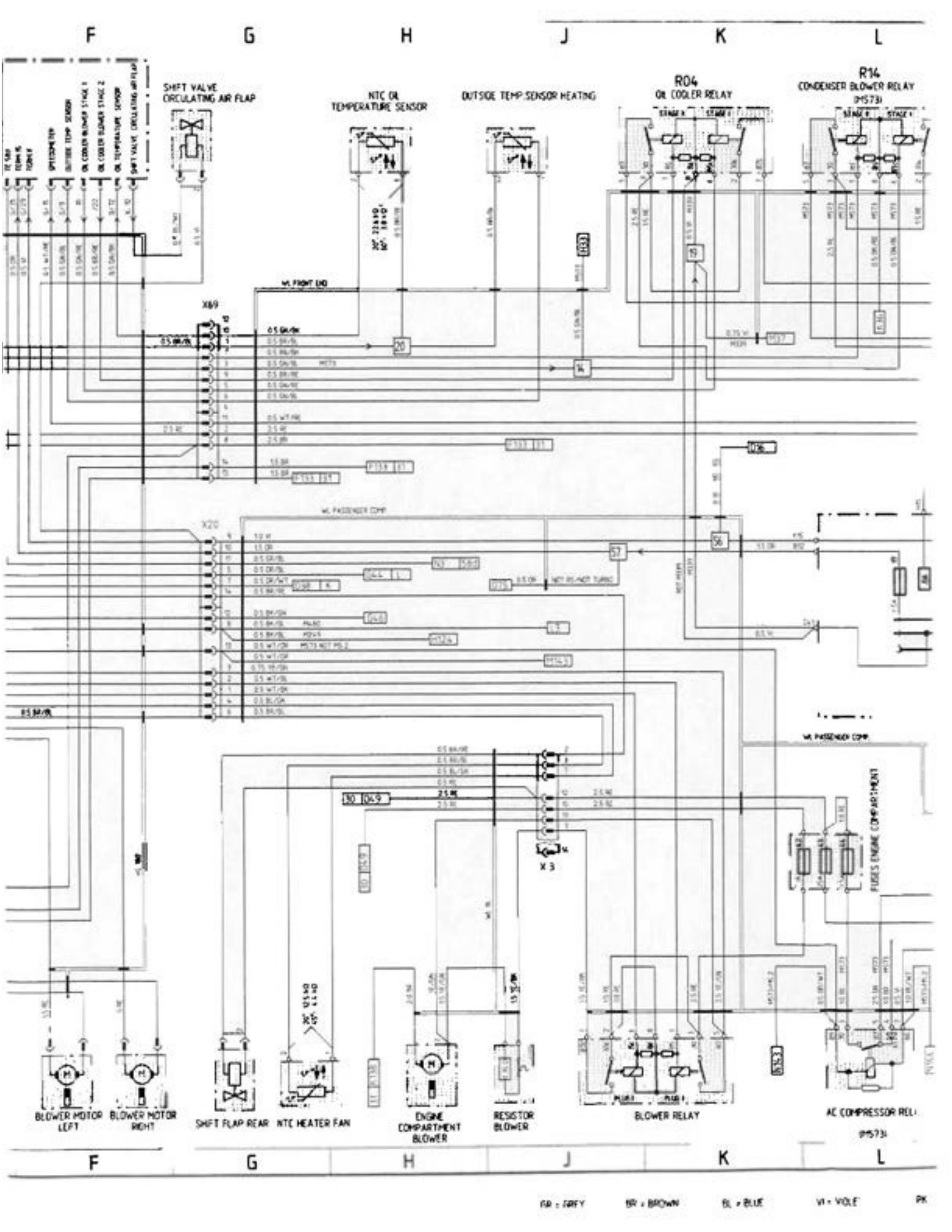
F
G
H
J
K
L
SHIFT VALVE CIRCULATING AIR FLAP
NTC OIL TEMPERATURE SENSOR
OUTSIDE TEMP.SENSOR HEATING
R04
OIL COOLER RELAY
R14
CONDENSER BLOWER RELAY
(M573)
X69
X20
X 3
FUSES ENGINE COMPARTMENT
BLOWER MOTOR LEFT
BLOWER MOTOR RIGHT
SHIFT FLAP REAR
NTC HEATER FAN
ENGINE COMPARTMENT BLOWER
RESISTOR BLOWER
BLOWER RELAY
AC COMPRESSOR RELA
(M573)
GR = GREY
BR = BROWN
BL = BLUE
VI = VIOLE
PK

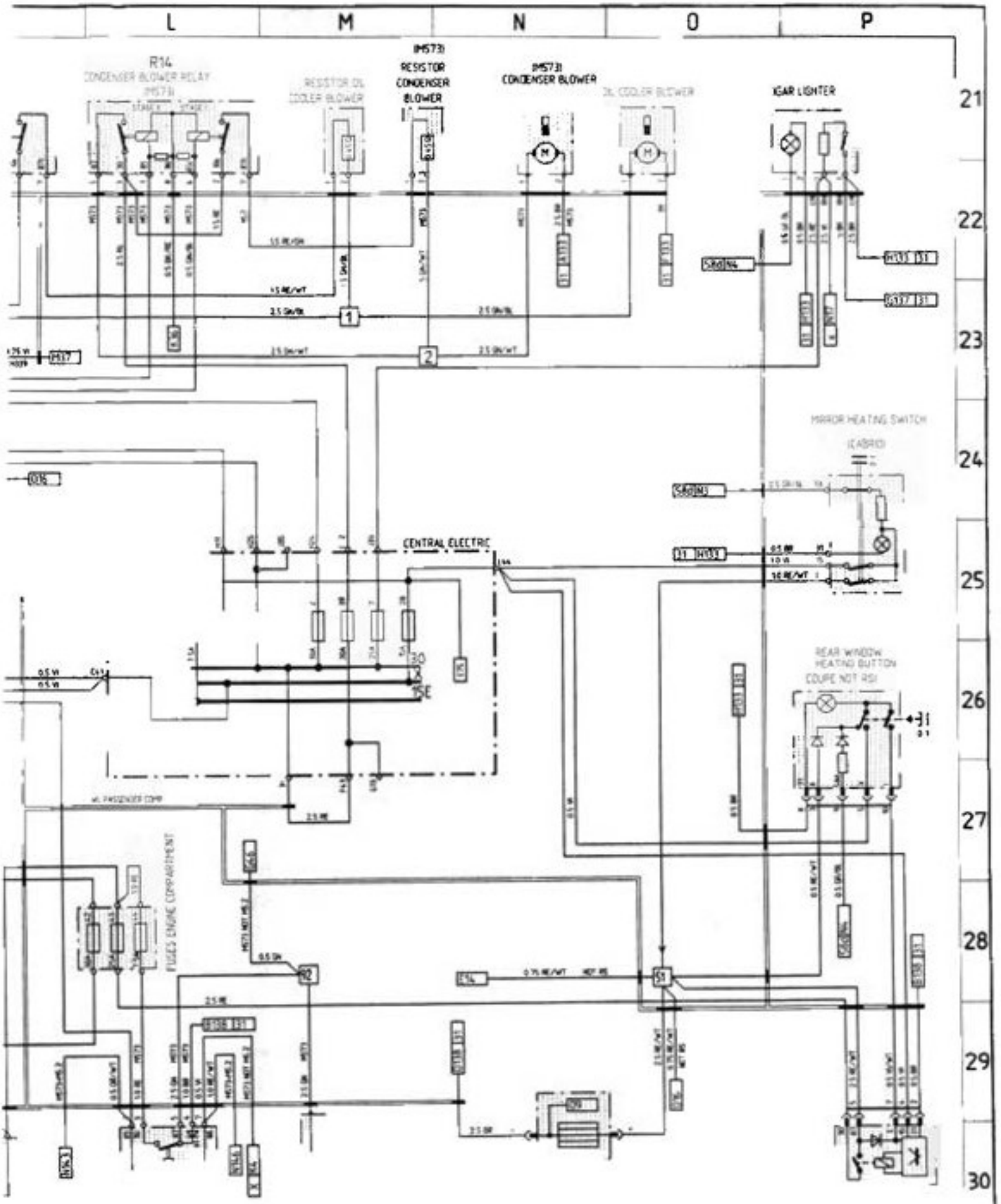
L
M
N
O
P
21
22
23
24
25
26
27
28
29
30
R14
CONDENSER BLOWER RELAY
(M573)
RESISTOR OIL COOLER BLOWER
(M573)
RESISTOR CONDENSER BLOWER
(M573)
CONDENSER BLOWER
OIL COOLER BLOWER
CIGAR LIGHTER
MIRROR HEATING SWITCH
(CABRIO)
CENTRAL ELECTRIC
REAR WINDOW HEATING BUTTON
COUPE NOT RSI
FUSES ENGINE COMPARTMENT

911 Carrera 993) MODEL 95/2 SHEET 4 A

ABS

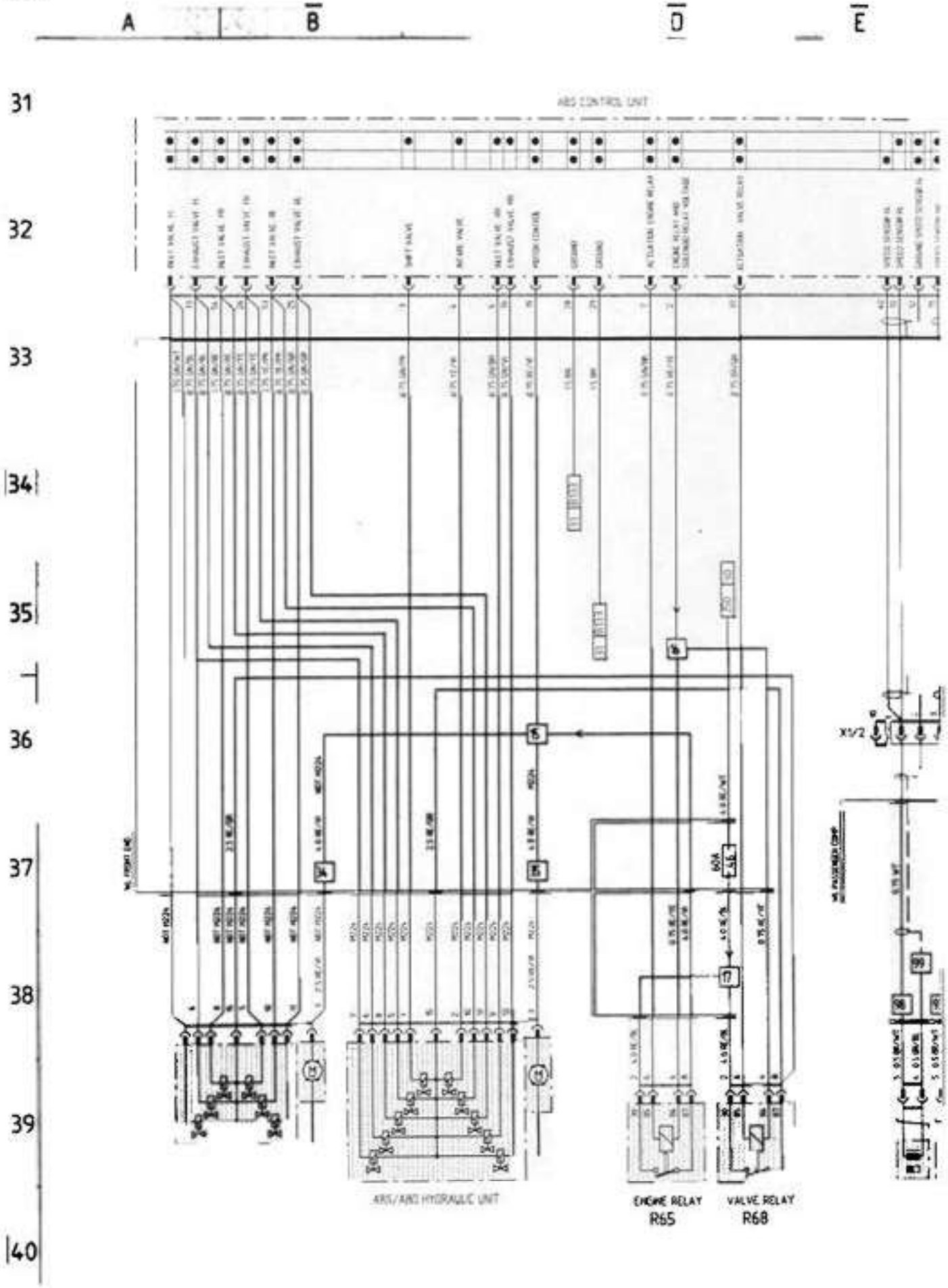

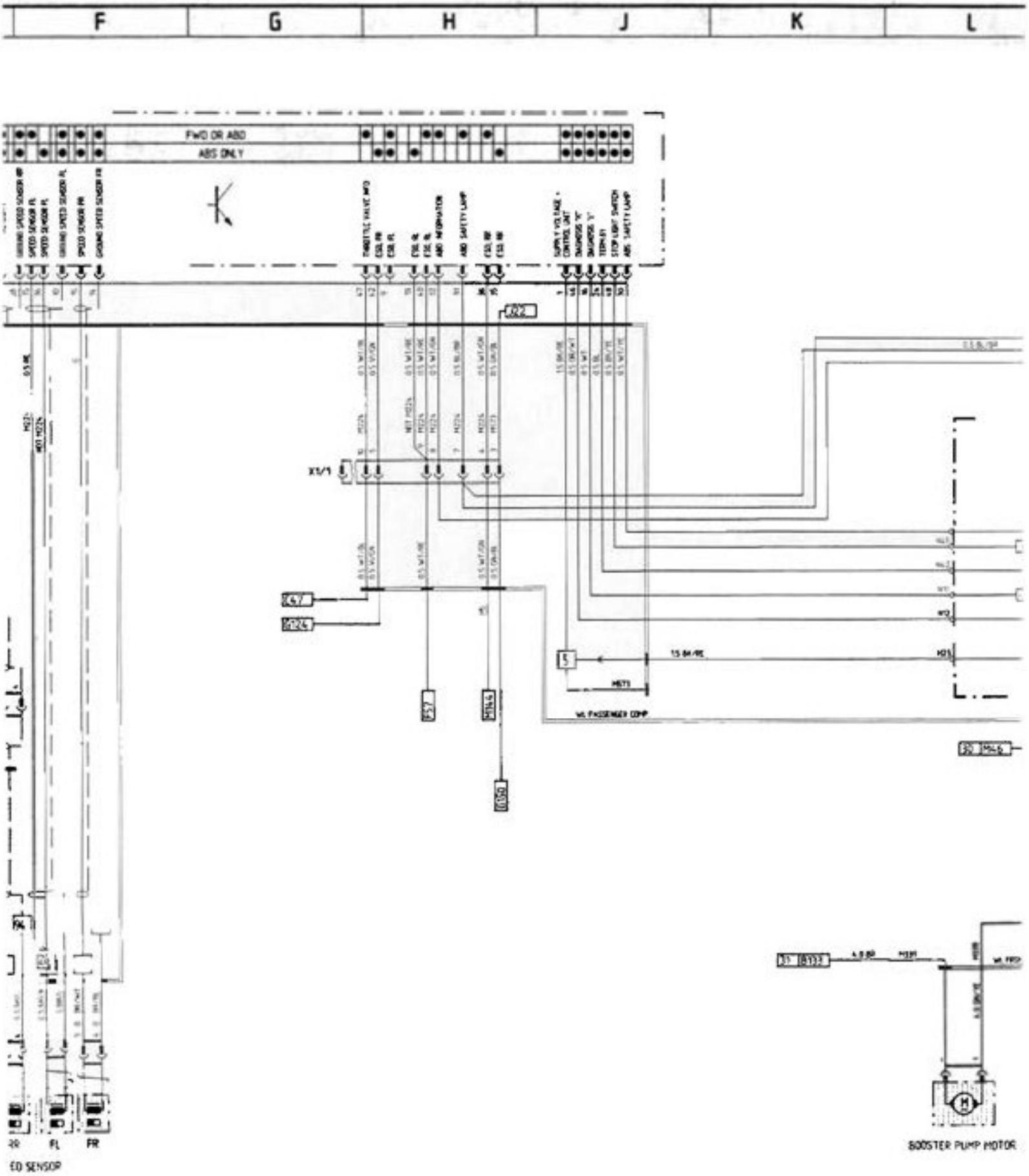

WT = WHITE RE = RED GN = GREEN YE = YELLOW GR = GREY BR = BROWN BL = BLUE VI = VIOLET

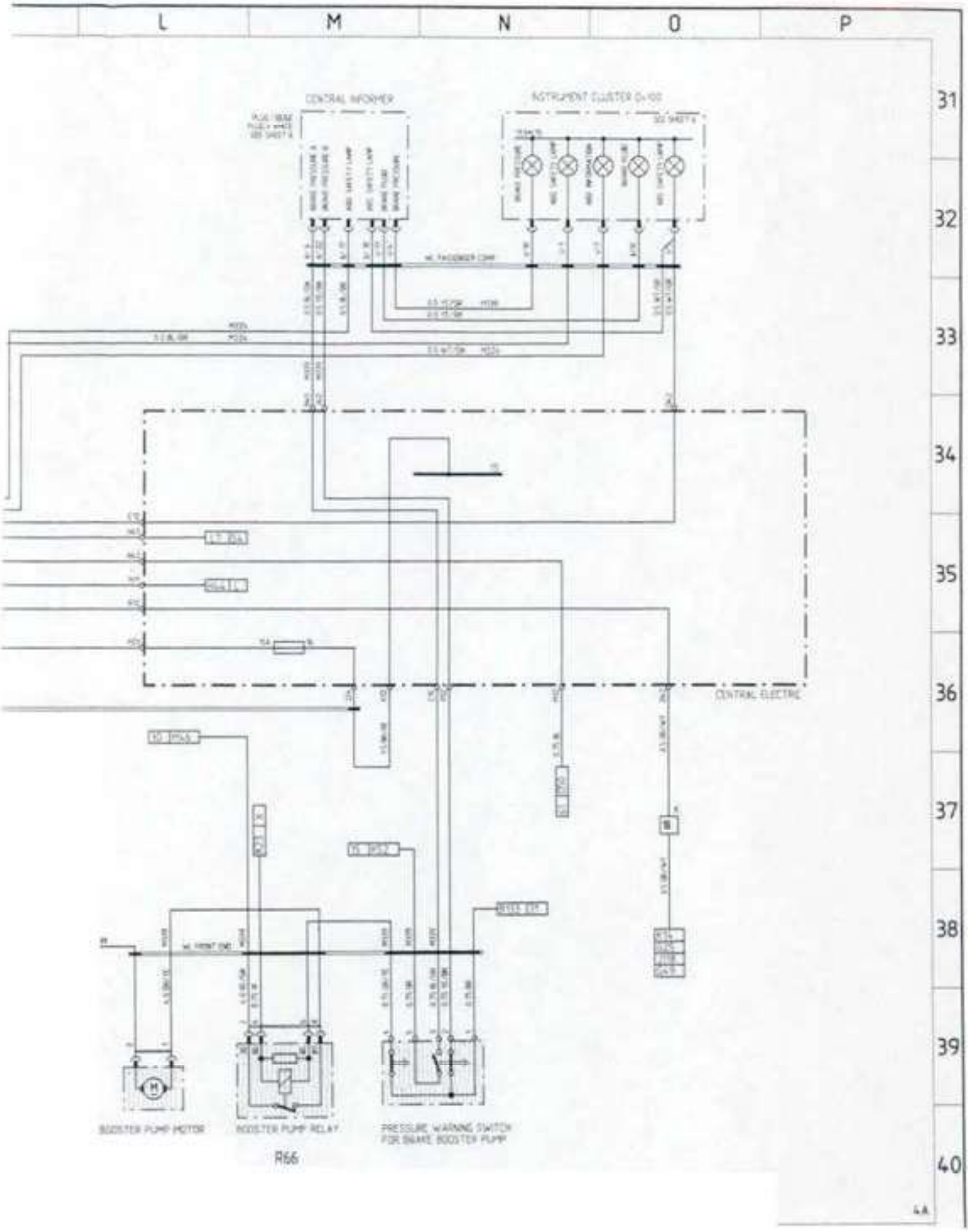
L
M
N
O
P
31
32
33
34
35
36
37
38
39
40
CENTRAL INFORMER
INSTRUMENT CLUSTER
CENTRAL ELECTRIC
BOOSTER PUMP MOTOR
BOOSTER PUMP RELAY
PRESSURE WARNING SWITCH
FOR BRAKE BOOSTER PUMP
R66

911 Carrera (993) MODEL 95/2 SHEET 4B

ABS (RS)

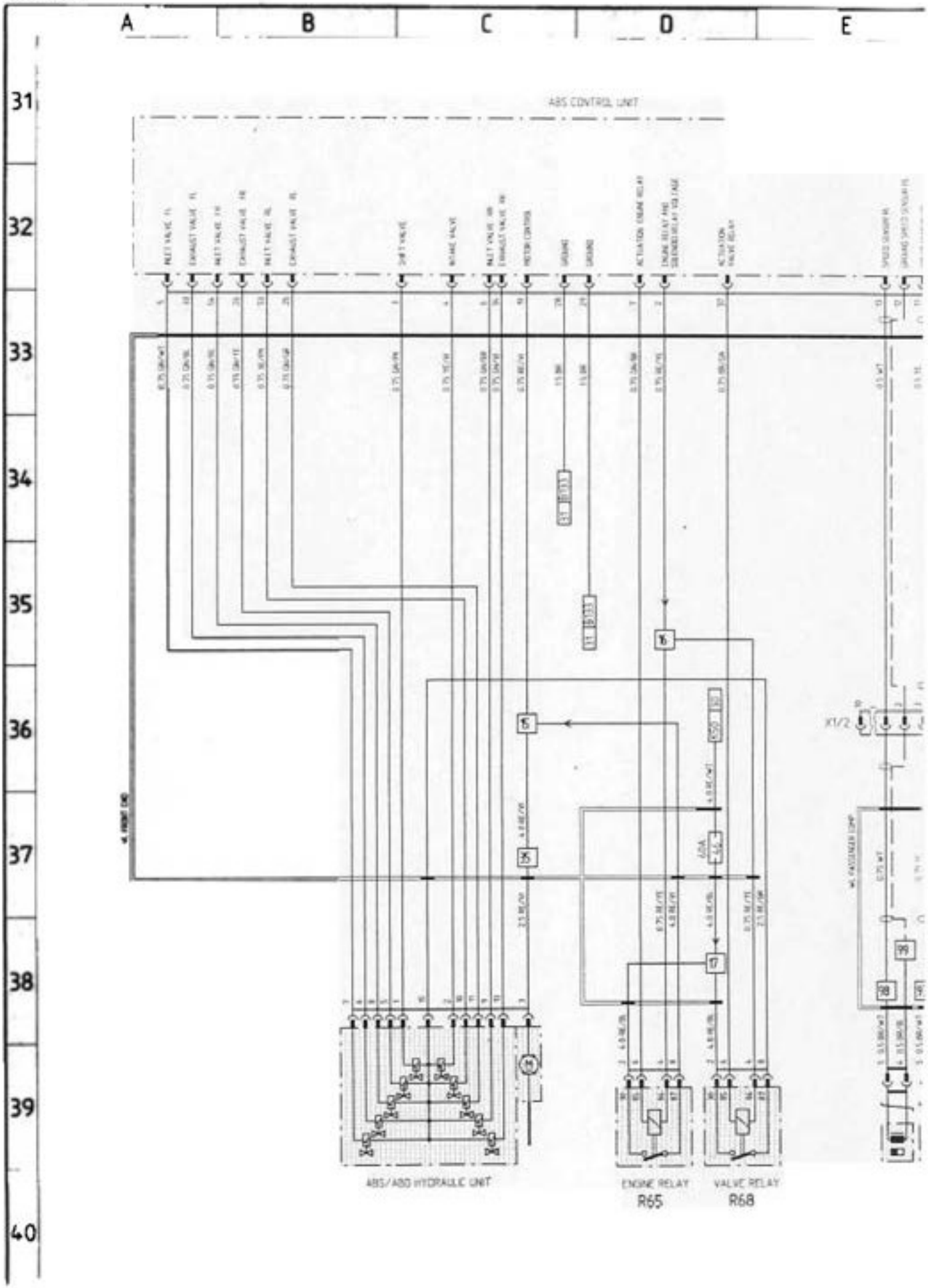

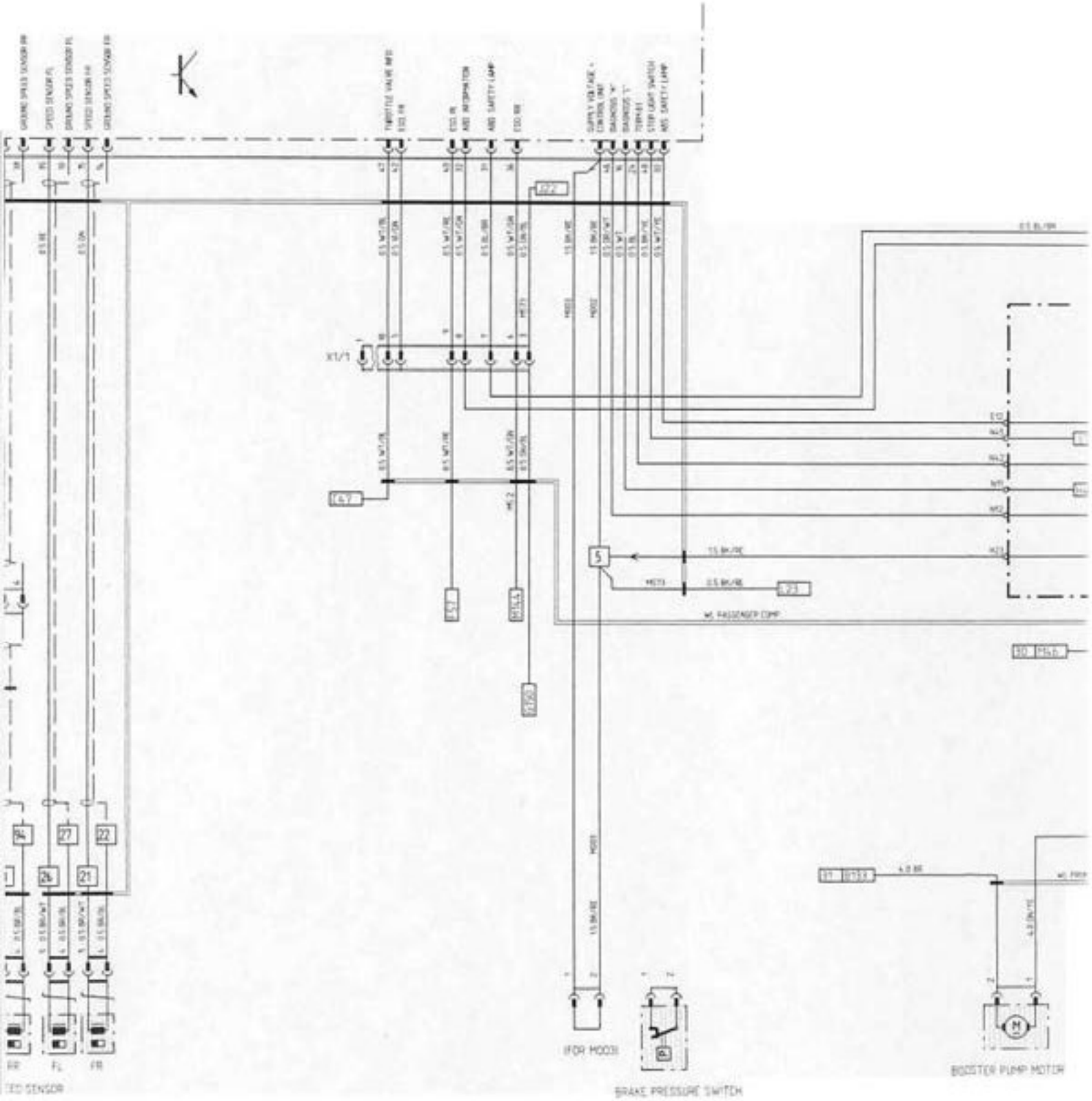

F	G	H	J	K	L
BK = BLACK	WT = WHITE	RE = RED	GN = GREEN	YE = YELLOW	GR = GREY	BR = BROWN	BL = BLUE	VI = VIOLET

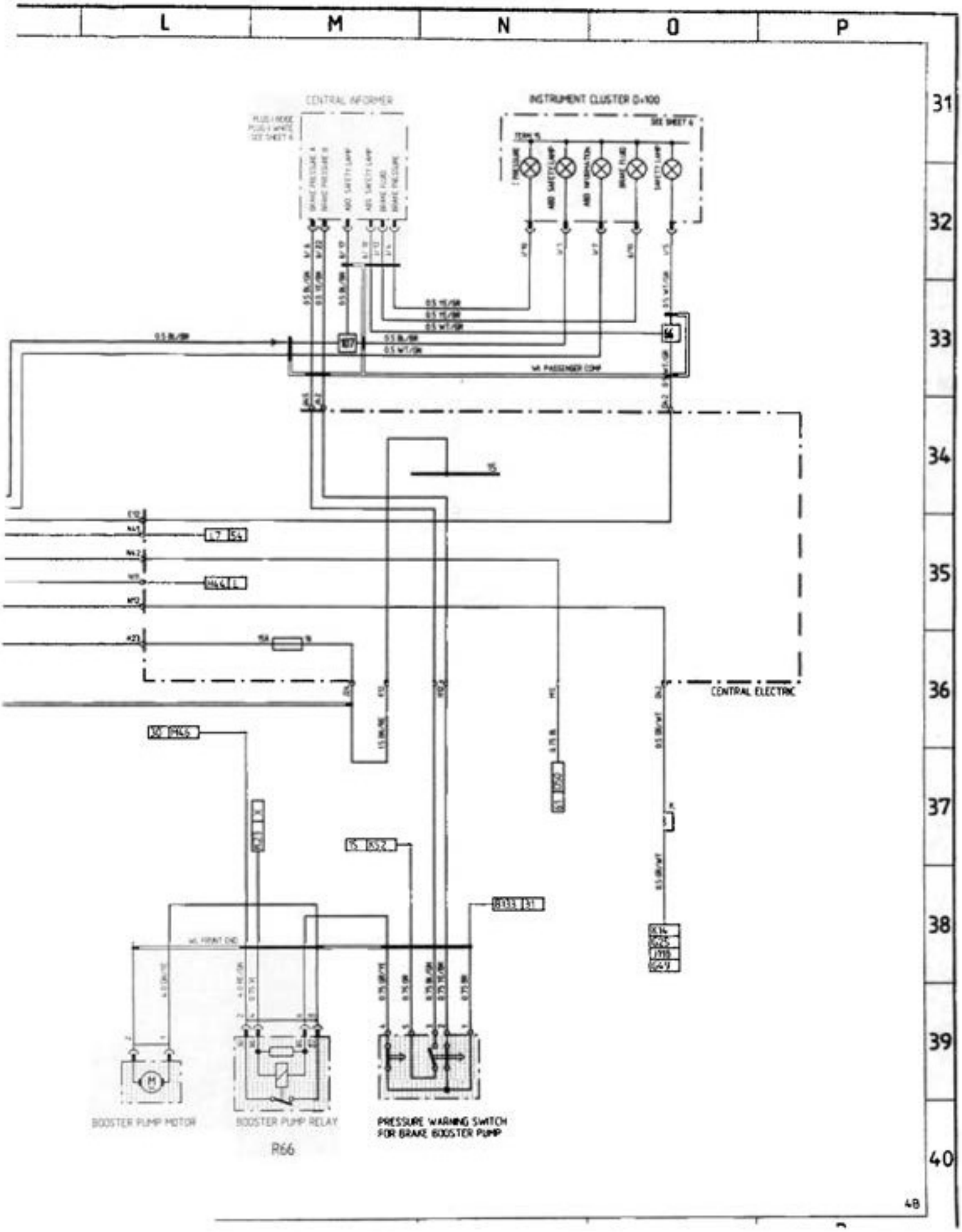
L
M
N
O
P
31
32
33
34
35
36
37
38
39
40
CENTRAL INFORMER
INSTRUMENT CLUSTER D-100
SEE SHEET 4
CENTRAL ELECTRIC
BOOSTER PUMP MOTOR
BOOSTER PUMP RELAY
R66
PRESSURE WARNING SWITCH
FOR BRAKE BOOSTER PUMP
48

911 Carrera (993) MODEL 95/2 SHEET 5 A

ENGINE ELECTRICS M2.10, FUEL, IGNITION SYSTEM, CRUISE CONTROL

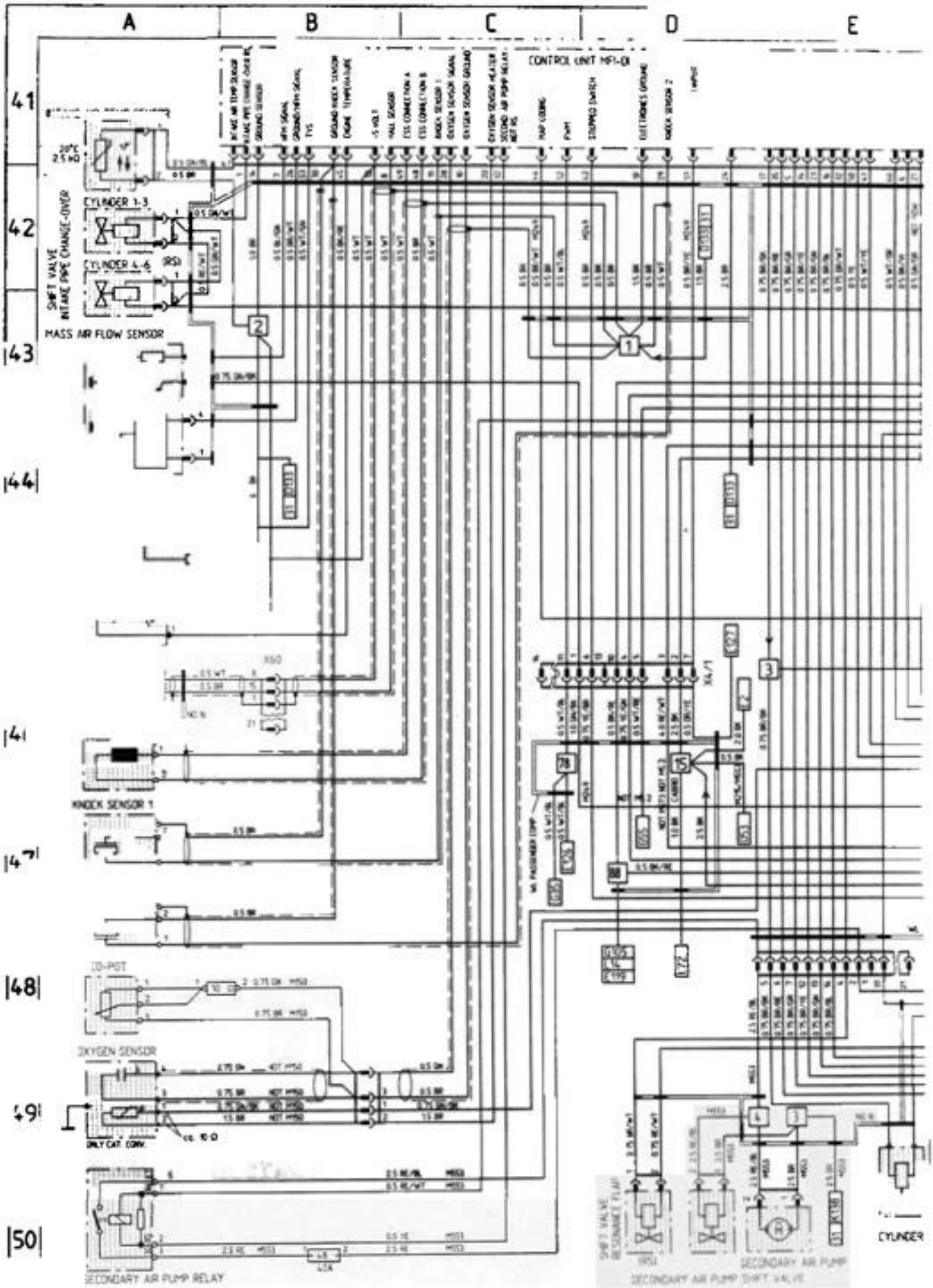

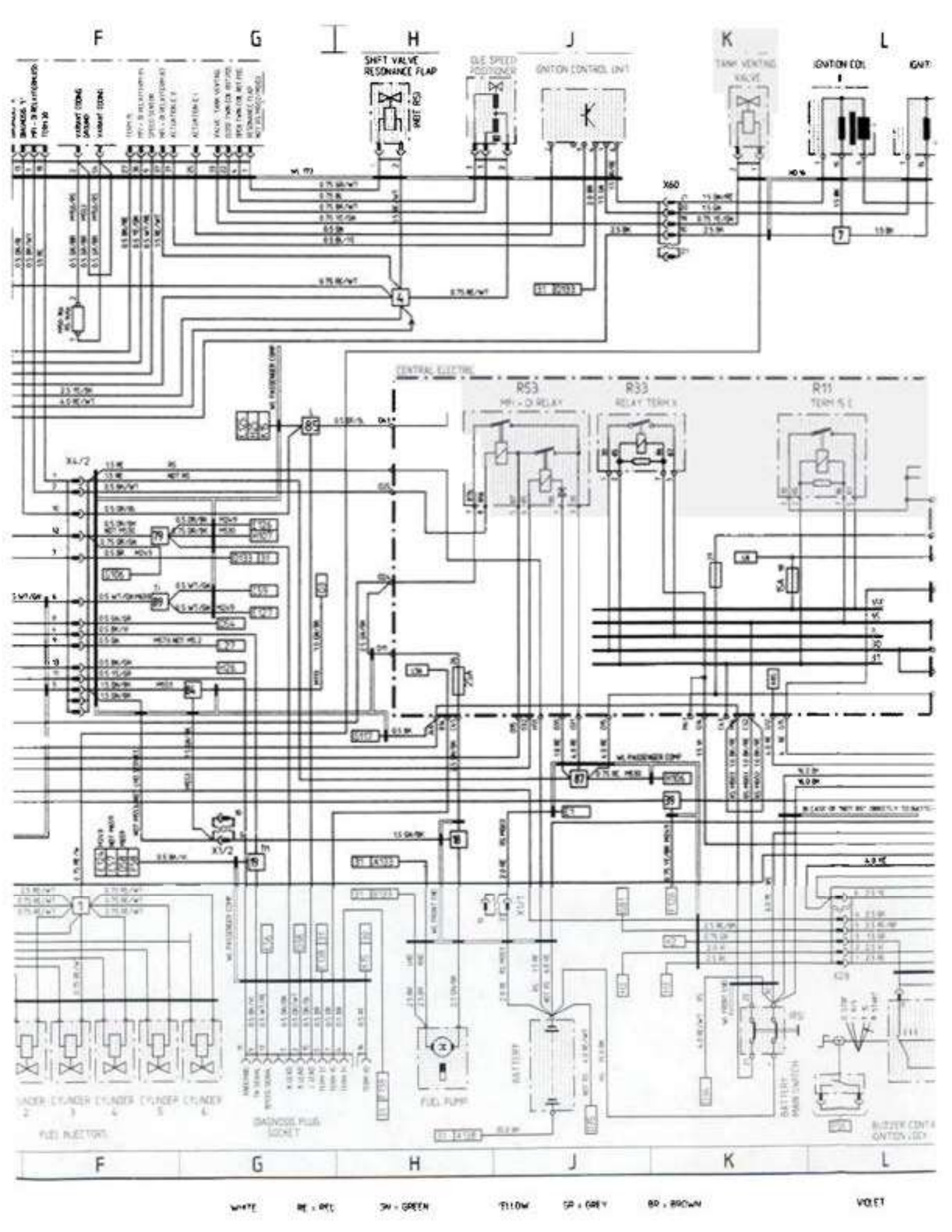
F
G
H
J
K
L
SHIFT VALVE RESONANCE FLAP
IDLE SPEED POSITIONER
IGNITION CONTROL UNIT
TANK VENTING VALVE
IGNITION COIL
X60
CENTRAL ELECTRIC
R53
MFI - O RELAY
R33
RELAY TERM X
R11
TERM 15 E
X4/2
X1/2
X1/1
FUEL INJECTORS
CYLINDER 2
CYLINDER 3
CYLINDER 4
CYLINDER 5
CYLINDER 6
SPARKING PLUG SOCKET
FUEL PUMP
BATTERY
BATTERY MAIN SWITCH
BUZZER CONT. IGNITION LOCK
WHITE
RED
GREEN
YELLOW
GREY
BROWN
VIOLET

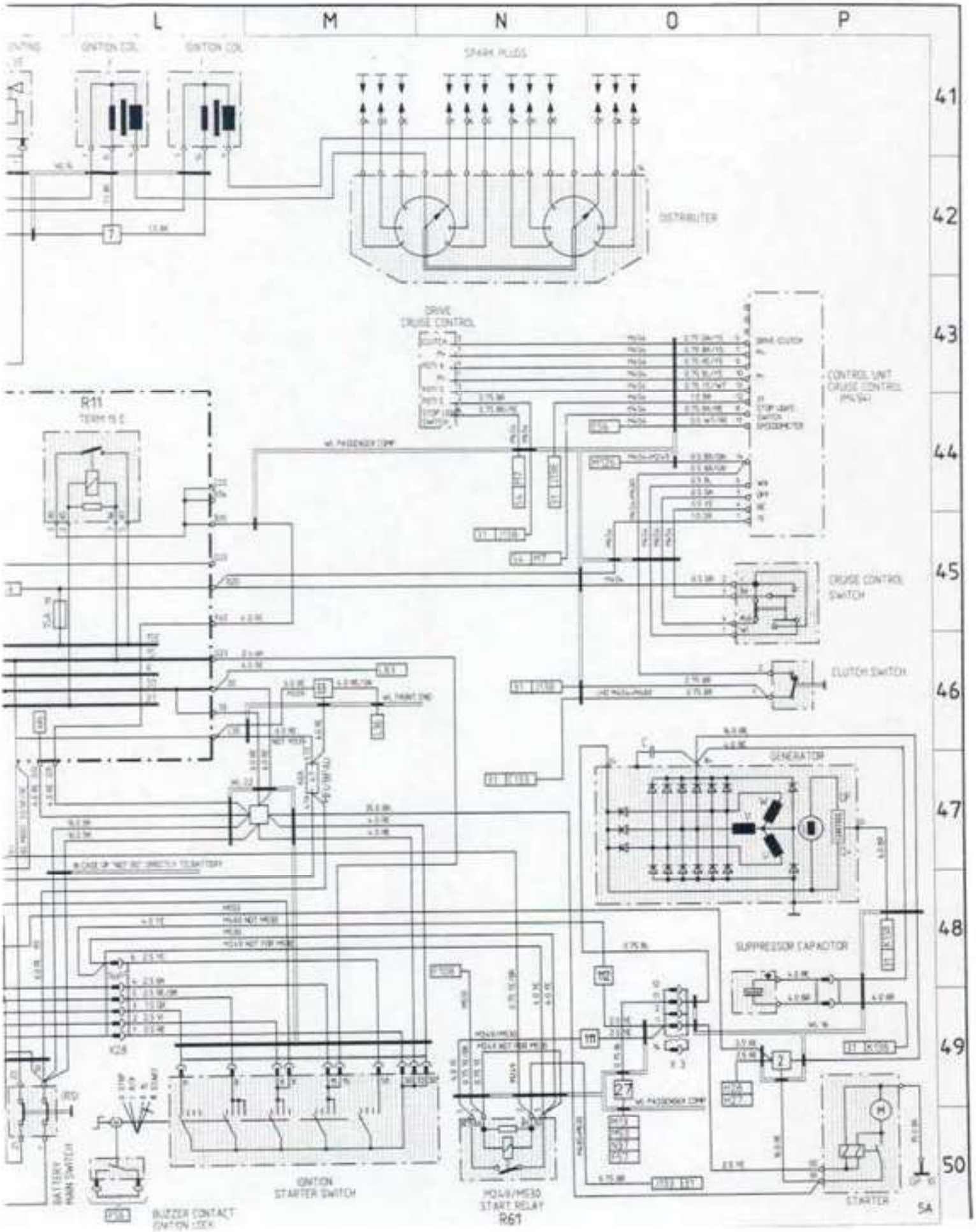
L
M
N
O
P
41
42
43
44
45
46
47
48
49
50
IGNITION COIL
IGNITION COIL
SPARK PLUGS
DISTRIBUTOR
DRIVE
CRUISE CONTROL
CONTROL UNIT
CRUISE CONTROL
R11
CRUISE CONTROL
SWITCH
CLUTCH SWITCH
GENERATOR
SUPPRESSOR CAPACITOR
BATTERY
MAIN SWITCH
BUZZER CONTACT
IGNITION
STARTER SWITCH
MG49/MG50
START RELAY
R61
STARTER
5A

911 Carrera (993) MODEL 95/2 SHEET 6

INSTRUMENTS AND SENSOR

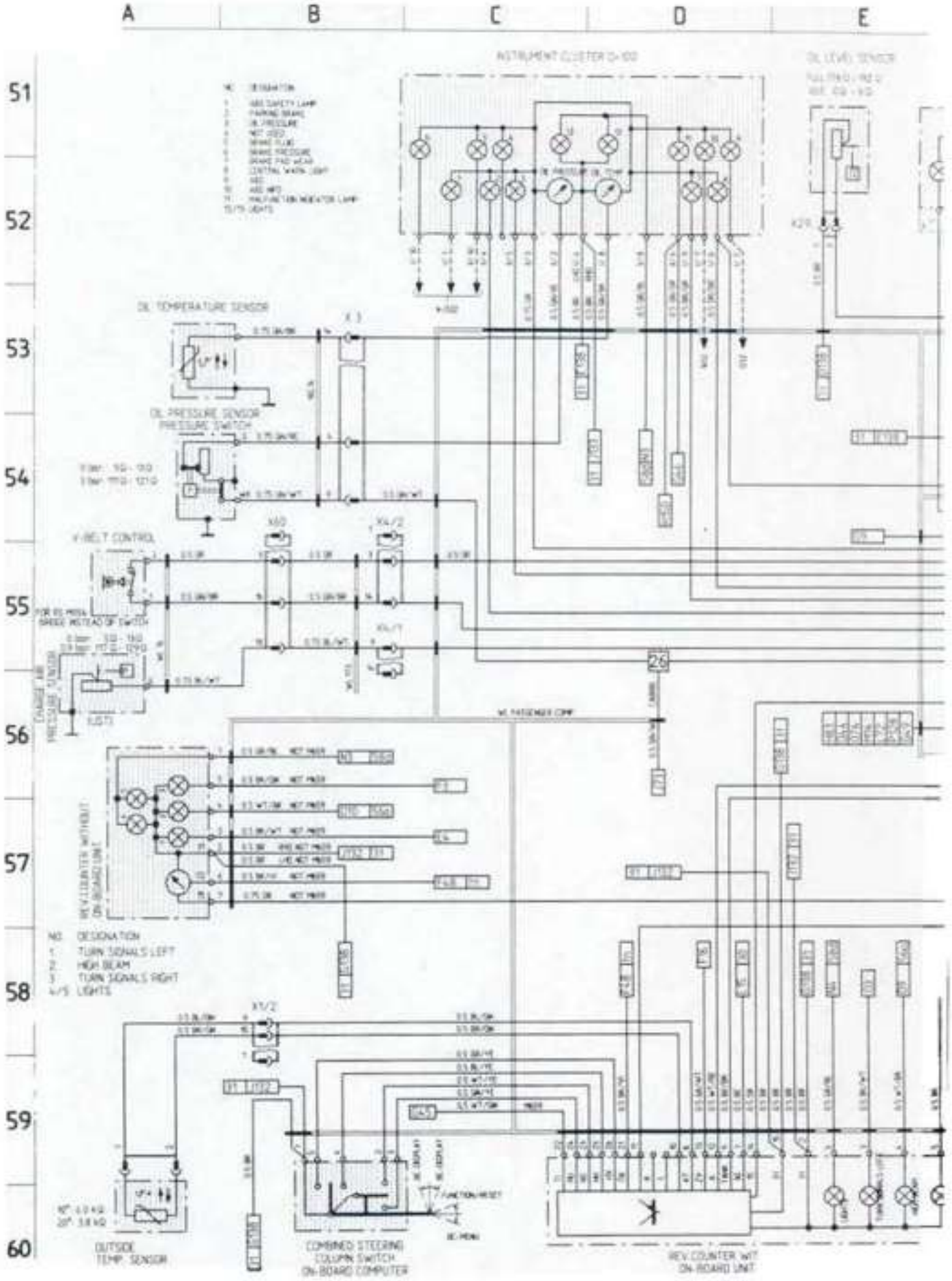

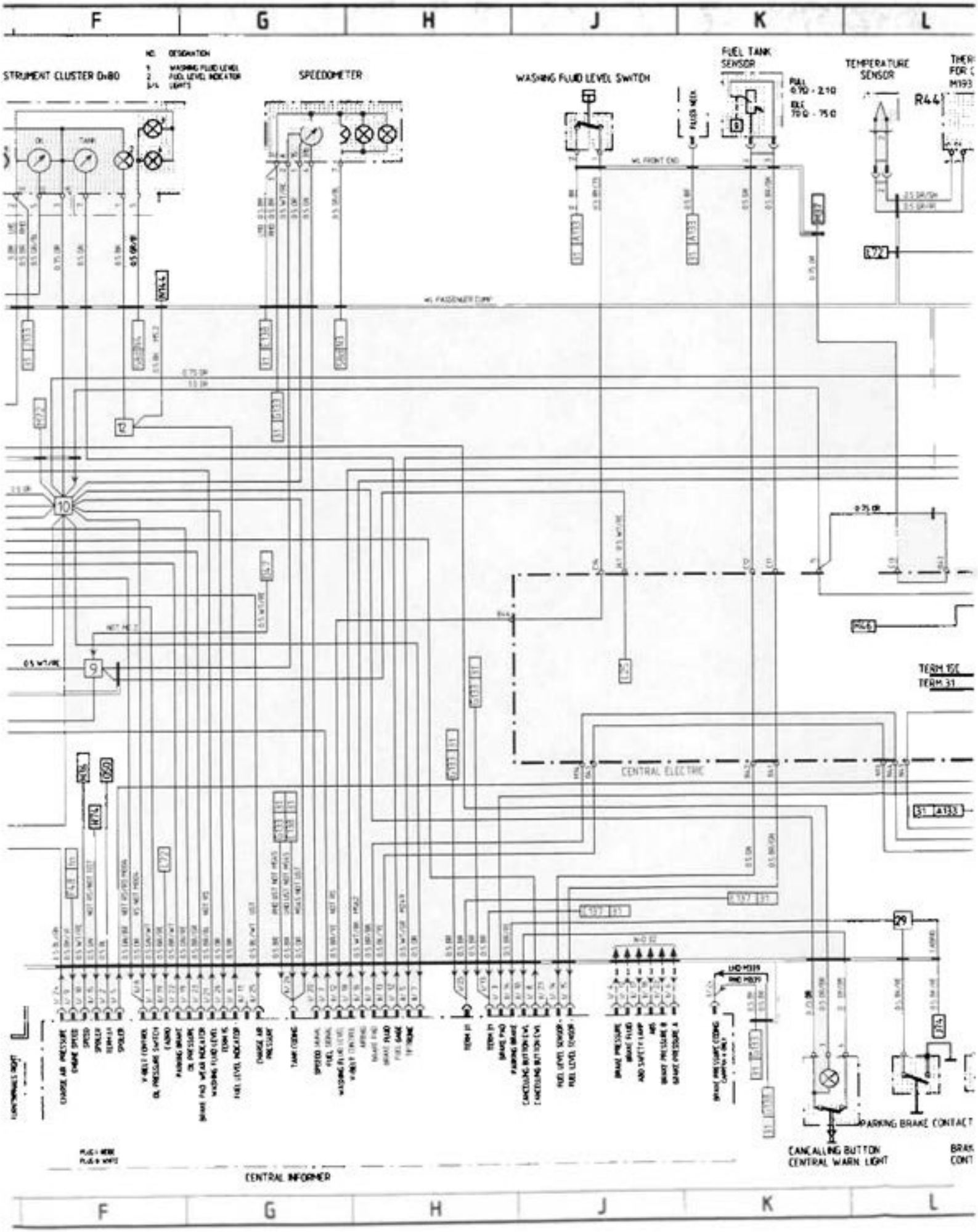
F
G
H
J
K
L
STRUMENT CLUSTER D+80
SPEEDOMETER
WASHING FLUID LEVEL SWITCH
FUEL TANK SENSOR
TEMPERATURE SENSOR
CENTRAL ELECTRIC
TERM 15C
TERM 31
PARKING BRAKE CONTACT
CANCALLING BUTTON CENTRAL WARN LIGHT
CENTRAL INFORMER

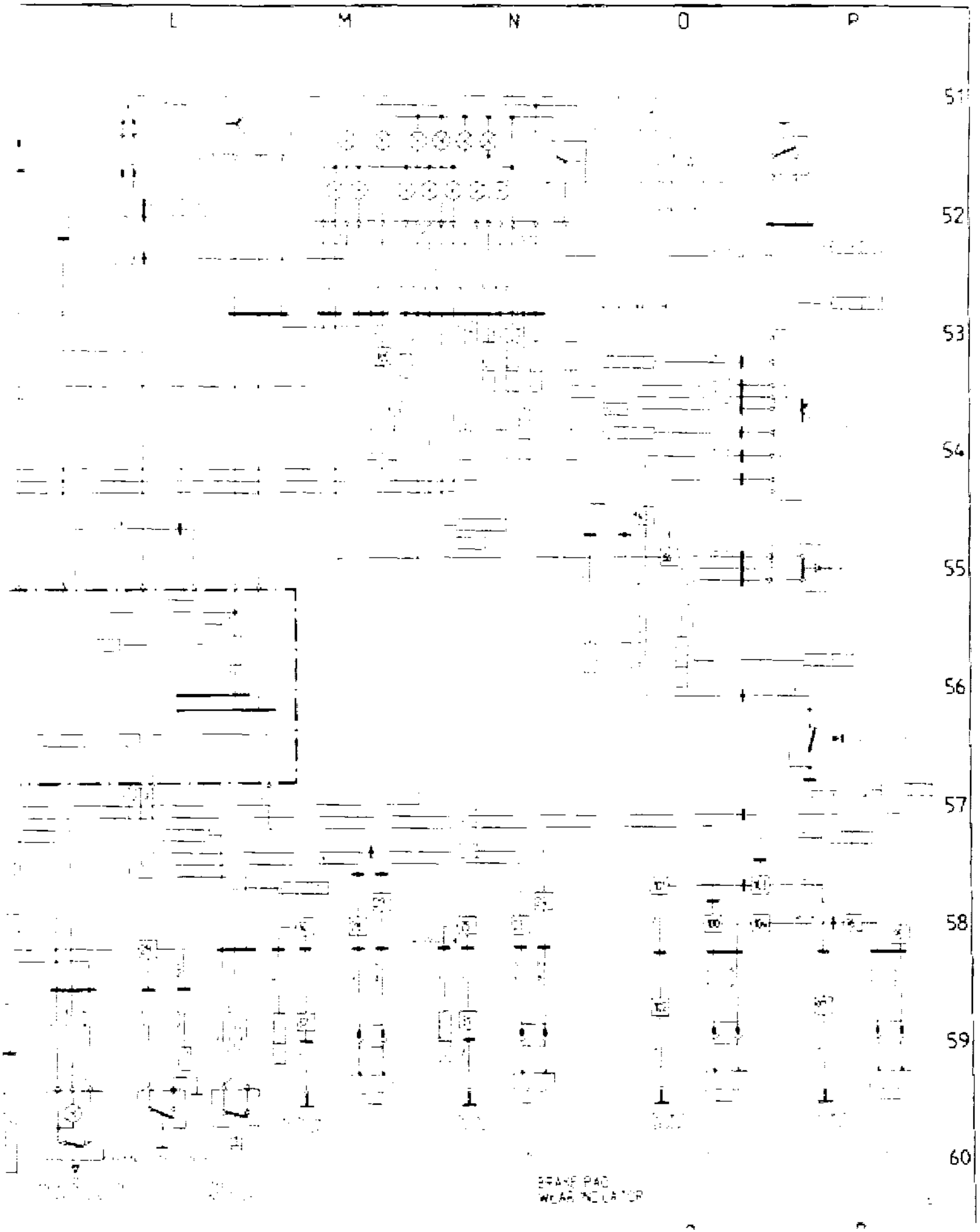
L
M
N
O
P
51
52
53
54
55
56
57
58
59
60
BRAKE PAD
WEAR INDICATOR

911 Carrera (993) MODEL 95/2 SHEET 7

SEATS

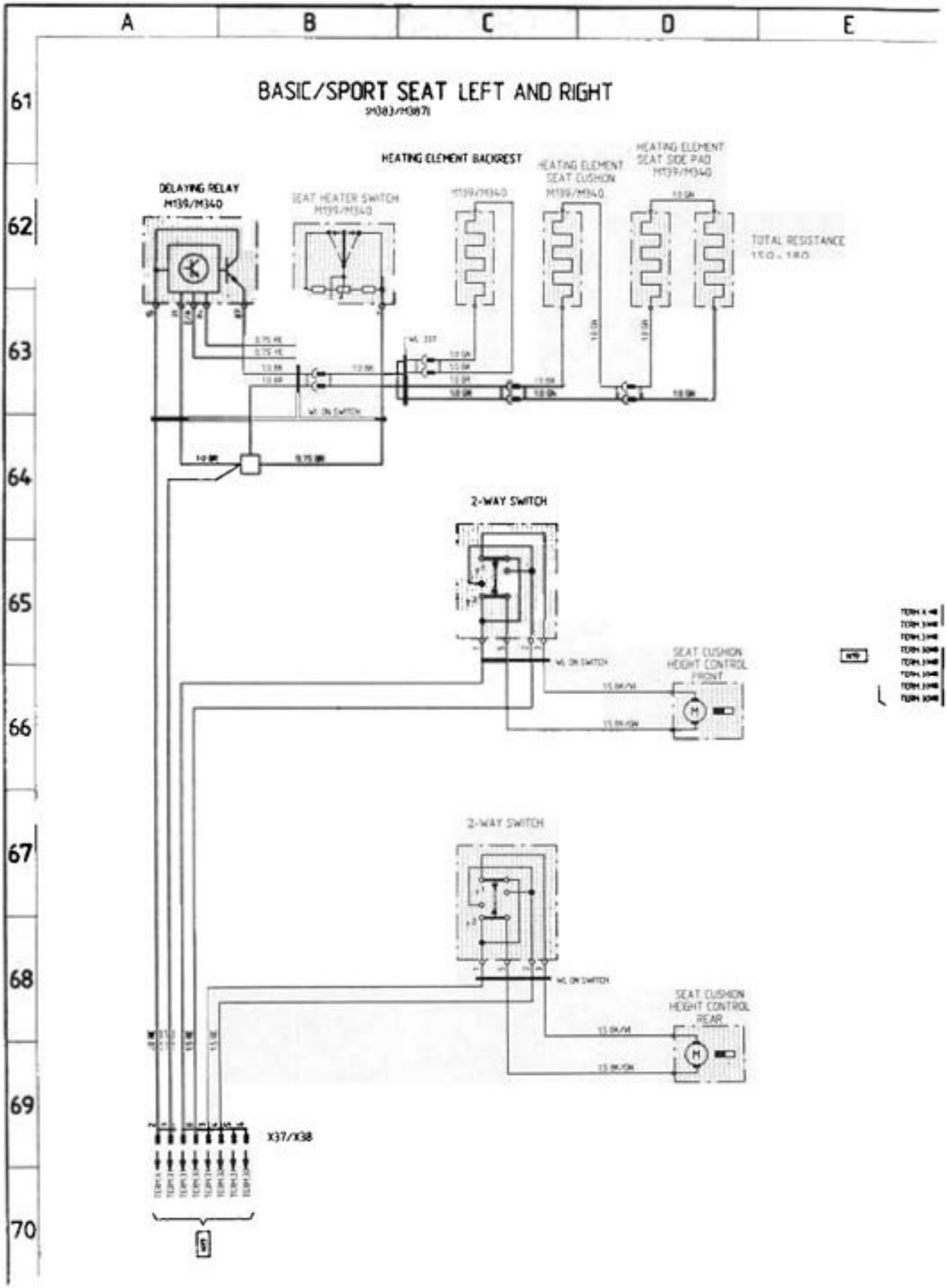

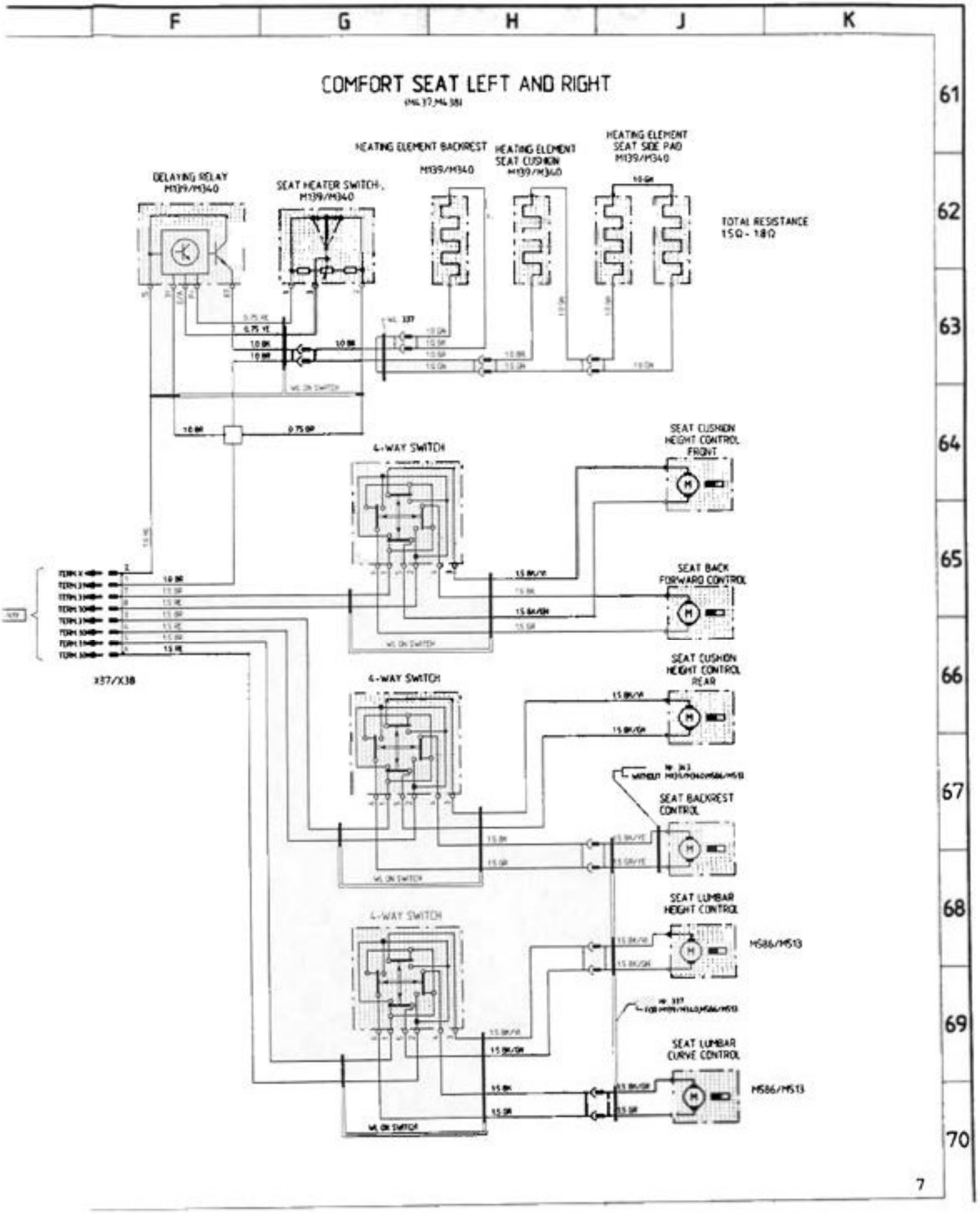
F
G
H
J
K
61
62
63
64
65
66
67
68
69
70
COMFORT SEAT LEFT AND RIGHT
HEATING ELEMENT BACKREST
M139/M340
HEATING ELEMENT SEAT CUSHION
M139/M340
HEATING ELEMENT SEAT SIDE PAD
M139/M340
DELAYING RELAY
M139/M340
SEAT HEATER SWITCH,
M139/M340
TOTAL RESISTANCE
15Ω - 18Ω
4-WAY SWITCH
SEAT CUSHION HEIGHT CONTROL FRONT
SEAT BACK FORWARD CONTROL
X37/X38
4-WAY SWITCH
SEAT CUSHION HEIGHT CONTROL REAR
SEAT BACKREST CONTROL
4-WAY SWITCH
SEAT LUMBAR HEIGHT CONTROL
M586/M513
SEAT LUMBAR CURVE CONTROL
M586/M513
7

911 Carrera (993) MODEL 95/2 SHEET 8

REAR SPOILER, TWO-TONE HORNS, WIPE- AND WASH CLEANERS, SUN ROOF, CONVERTIBLE TOP

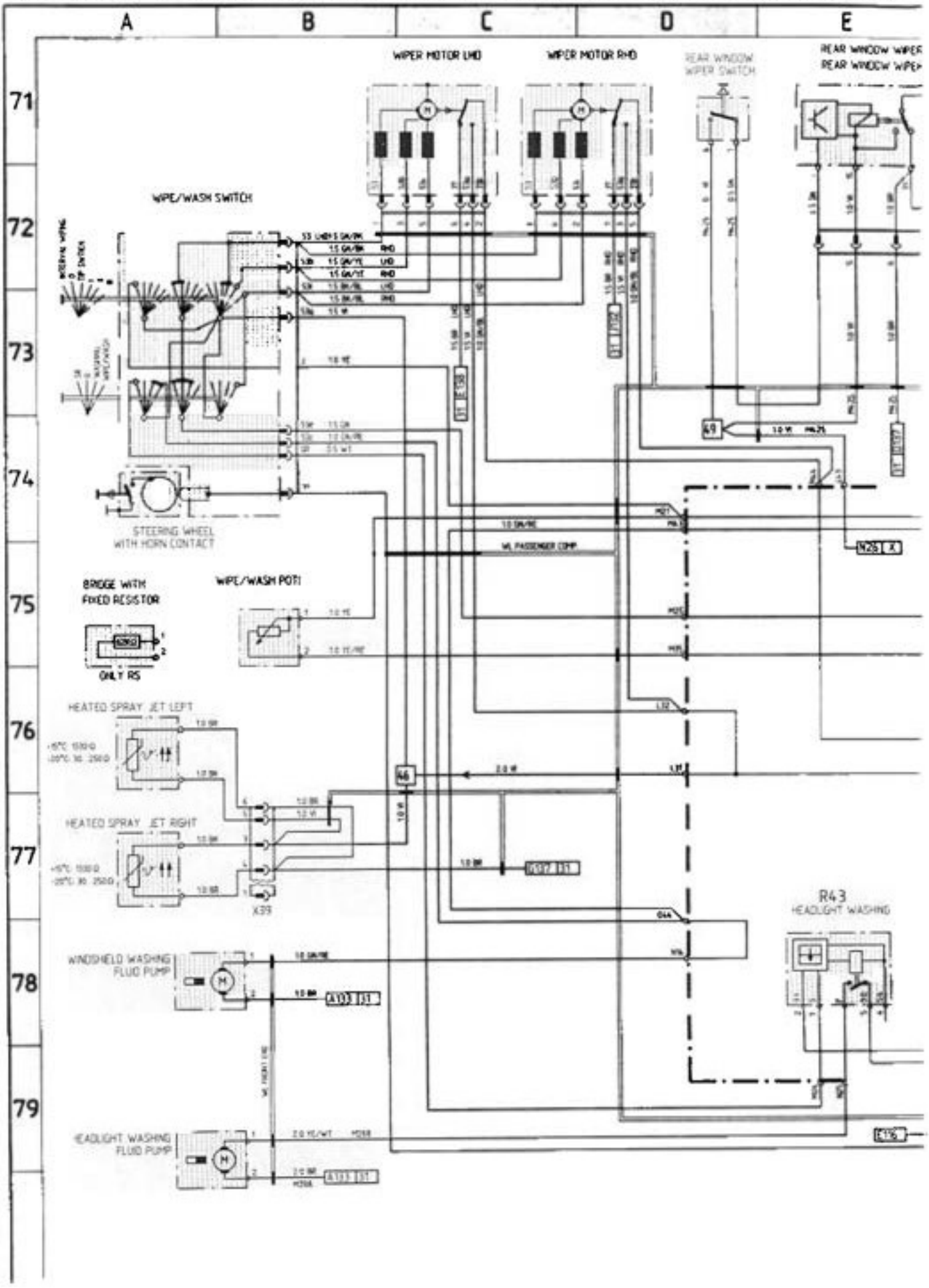

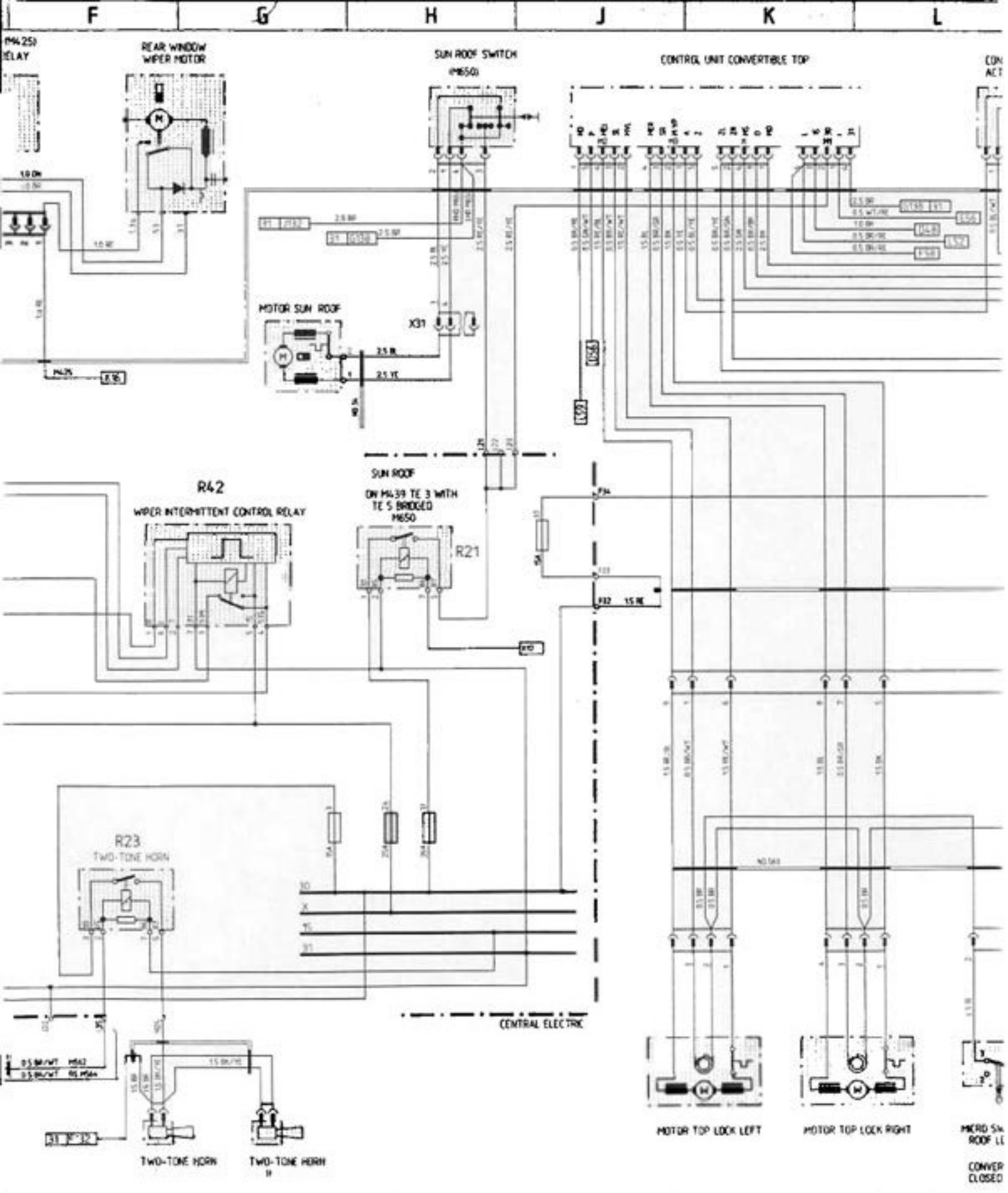
F
G
H
J
K
L
REAR WINDOW WIPER MOTOR
SUN ROOF SWITCH (M650)
CONTROL UNIT CONVERTIBLE TOP
MOTOR SUN ROOF
X31
R42
WIPER INTERMITTENT CONTROL RELAY
SUN ROOF
ON M439 TE 3 WITH TE 5 BRIDGED M650
R21
R23
TWO-TONE HORN
CENTRAL ELECTRIC
MOTOR TOP LOCK LEFT
MOTOR TOP LOCK RIGHT
TWO-TONE HORN
TWO-TONE HORN II

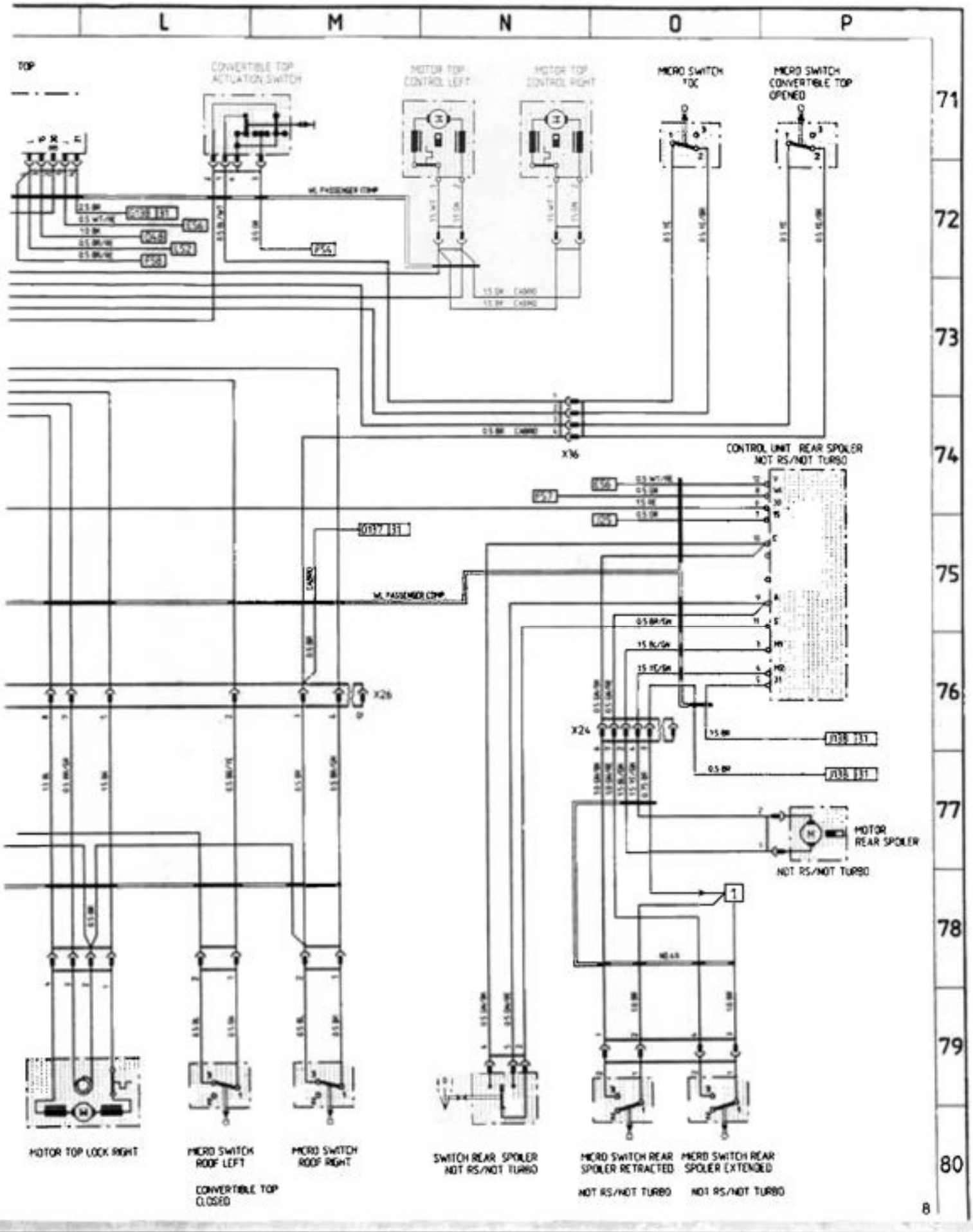
L
M
N
O
P
TOP
CONVERTIBLE TOP ACTUATION SWITCH
MOTOR TOP CONTROL LEFT
MOTOR TOP CONTROL RIGHT
MICRO SWITCH TOC
MICRO SWITCH CONVERTIBLE TOP OPENED
71
72
73
74
75
76
77
78
79
80
X36
CONTROL UNIT REAR SPOILER NOT RS/NOT TURBO
X26
X24
MOTOR REAR SPOILER
NOT RS/NOT TURBO
MOTOR TOP LOCK RIGHT
MICRO SWITCH ROOF LEFT
CONVERTIBLE TOP CLOSED
MICRO SWITCH ROOF RIGHT
SWITCH REAR SPOILER NOT RS/NOT TURBO
MICRO SWITCH REAR SPOILER RETRACTED
NOT RS/NOT TURBO
MICRO SWITCH REAR SPOILER EXTENDED
NOT RS/NOT TURBO

911 Carrera (993) MODEL 95/2 SHEET 9

RADIO, TELEPHONE

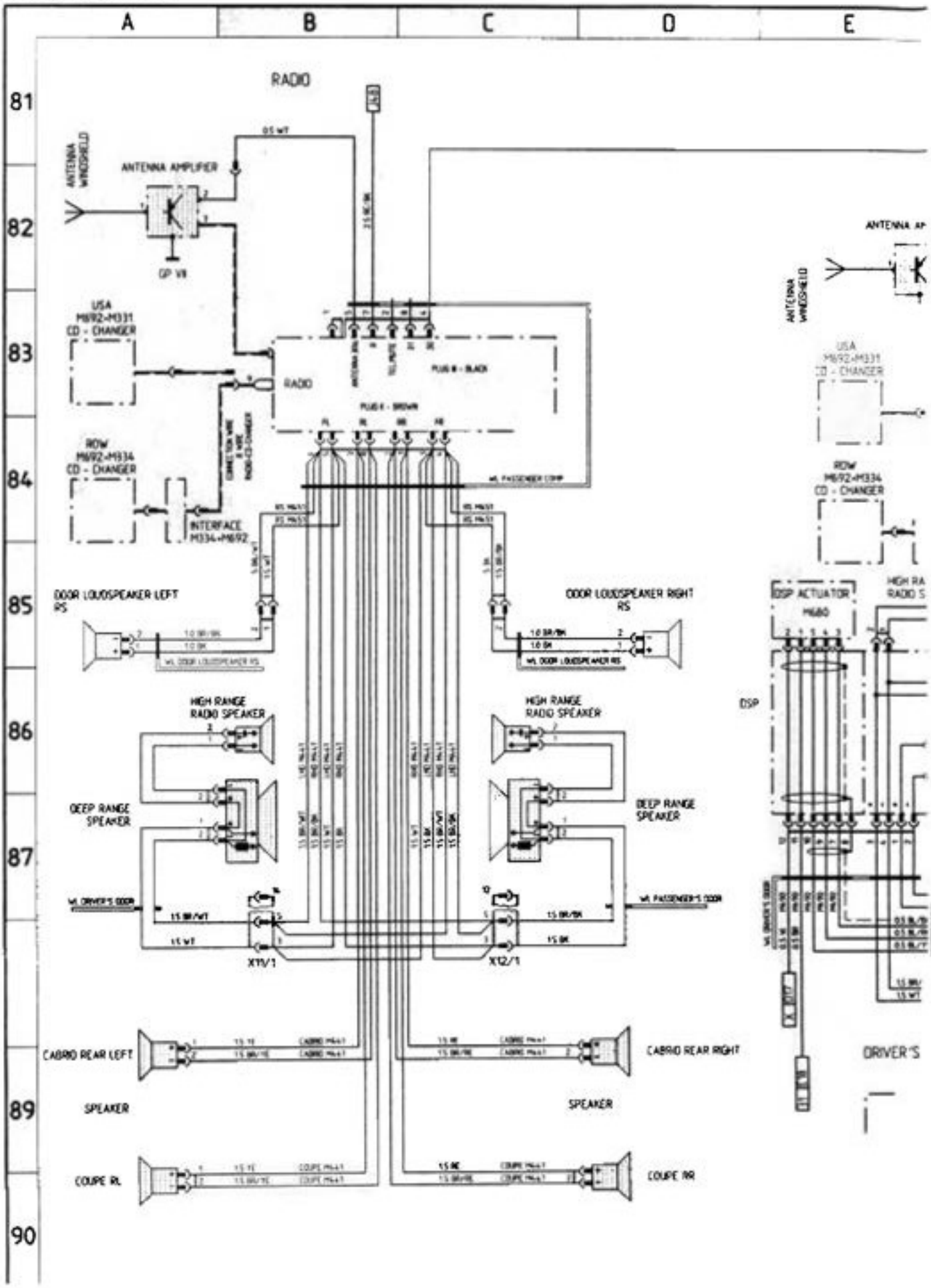

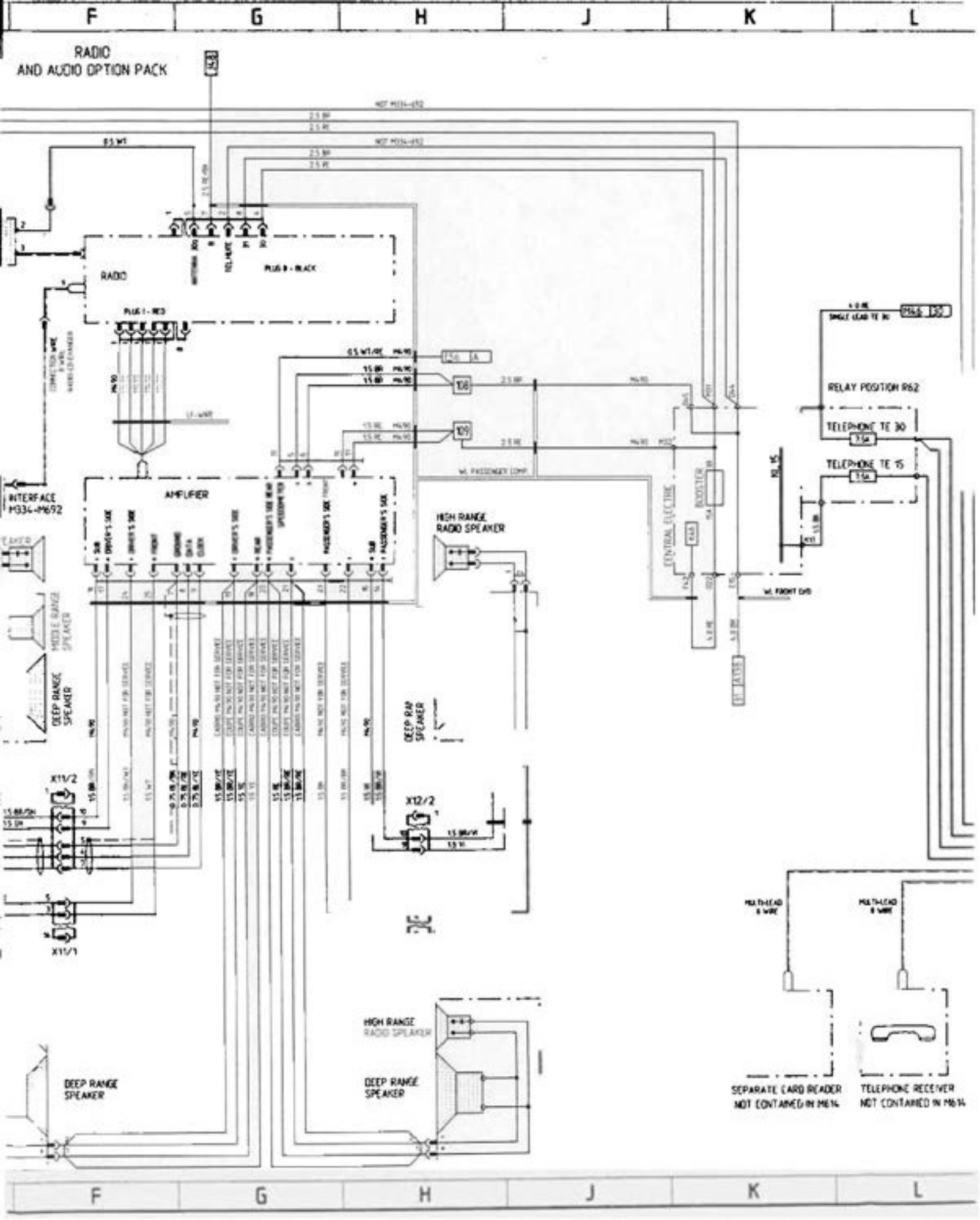
F
G
H
J
K
L
RADIO
AND AUDIO OPTION PACK
RADIO
PLUG 1 - RED
PLUG 2 - BLACK
AMPLIFIER
INTERFACE
M334-M692
HIGH RANGE
RADIO SPEAKER
MIDDLE RANGE
SPEAKER
DEEP RANGE
SPEAKER
DEEP RAN
SPEAKER
X11/2
X11/1
X12/2
HIGH RANGE
RADIO SPEAKER
DEEP RANGE
SPEAKER
DEEP RANGE
SPEAKER
RELAY POSITION R62
TELEPHONE TE 30
TELEPHONE TE 15
CENTRAL ELECTRIC
BOOSTER
SEPARATE CARD READER
NOT CONTAINED IN M614
TELEPHONE RECEIVER
NOT CONTAINED IN M614
WT = WHITE
RE = RED
GN = GREEN
YE = YELLOW
GR = GREY
BR = BROWN
BL = BLUE
VI = VIOLET
PK = PINK

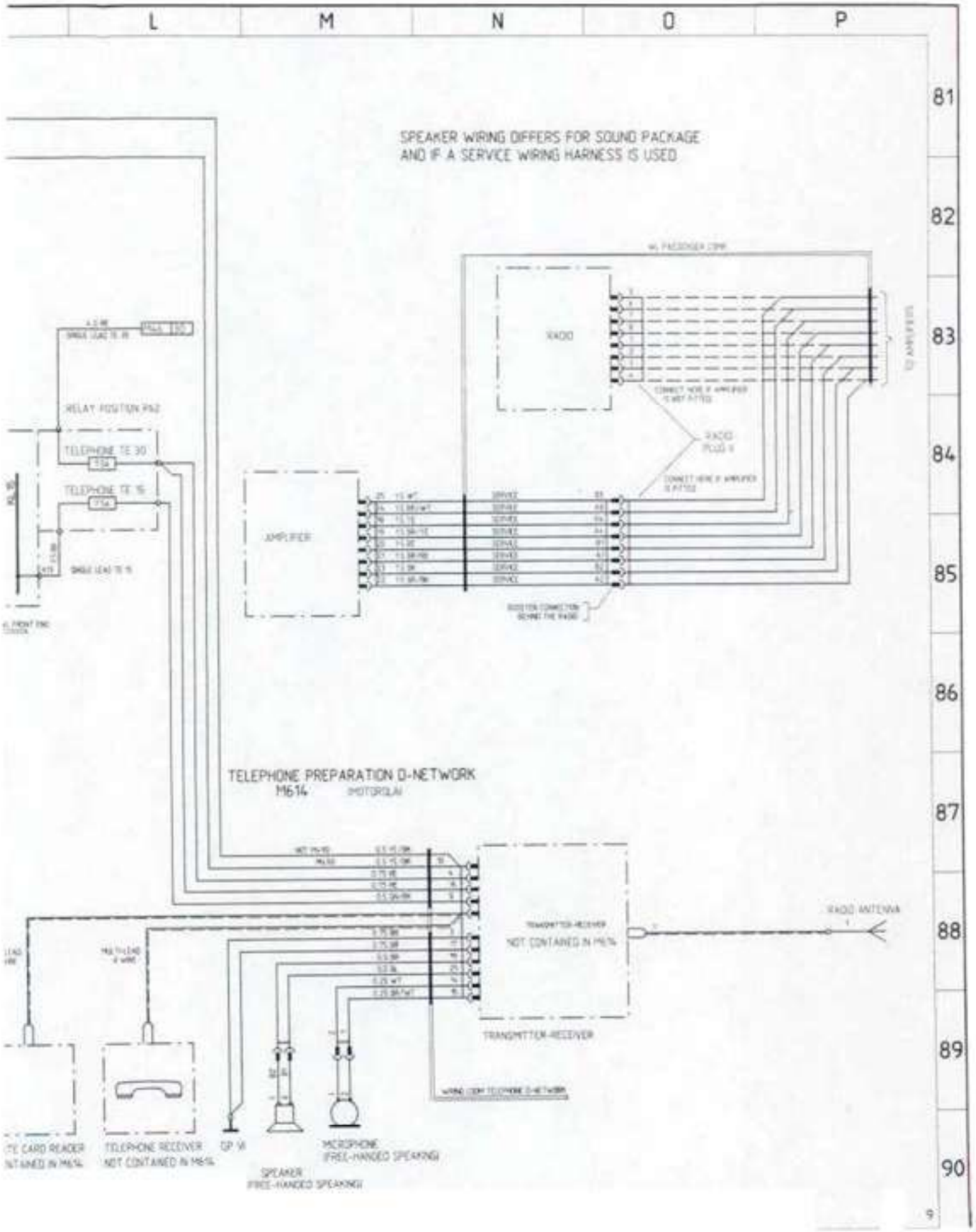
L
M
N
O
P
81
82
83
84
85
86
87
88
89
90
SPEAKER WIRING DIFFERS FOR SOUND PACKAGE
AND IF A SERVICE WIRING HARNESS IS USED
RADIO
AMPLIFIER
TELEPHONE TE 30
TELEPHONE TE 15
TELEPHONE PREPARATION D-NETWORK
M614
MOTOROLA
TRANSMITTER-RECEIVER
NOT CONTAINED IN M614
RADIO ANTENNA
TRANSMITTER-RECEIVER
TELEPHONE RECEIVER
NOT CONTAINED IN M614
MICROPHONE
(FREE-HANDED SPEAKING)
SPEAKER
(FREE-HANDED SPEAKING)

arrera 993 MODEL 95/2 SHEET 10

FOG LIGHT REAR OG LIGHT

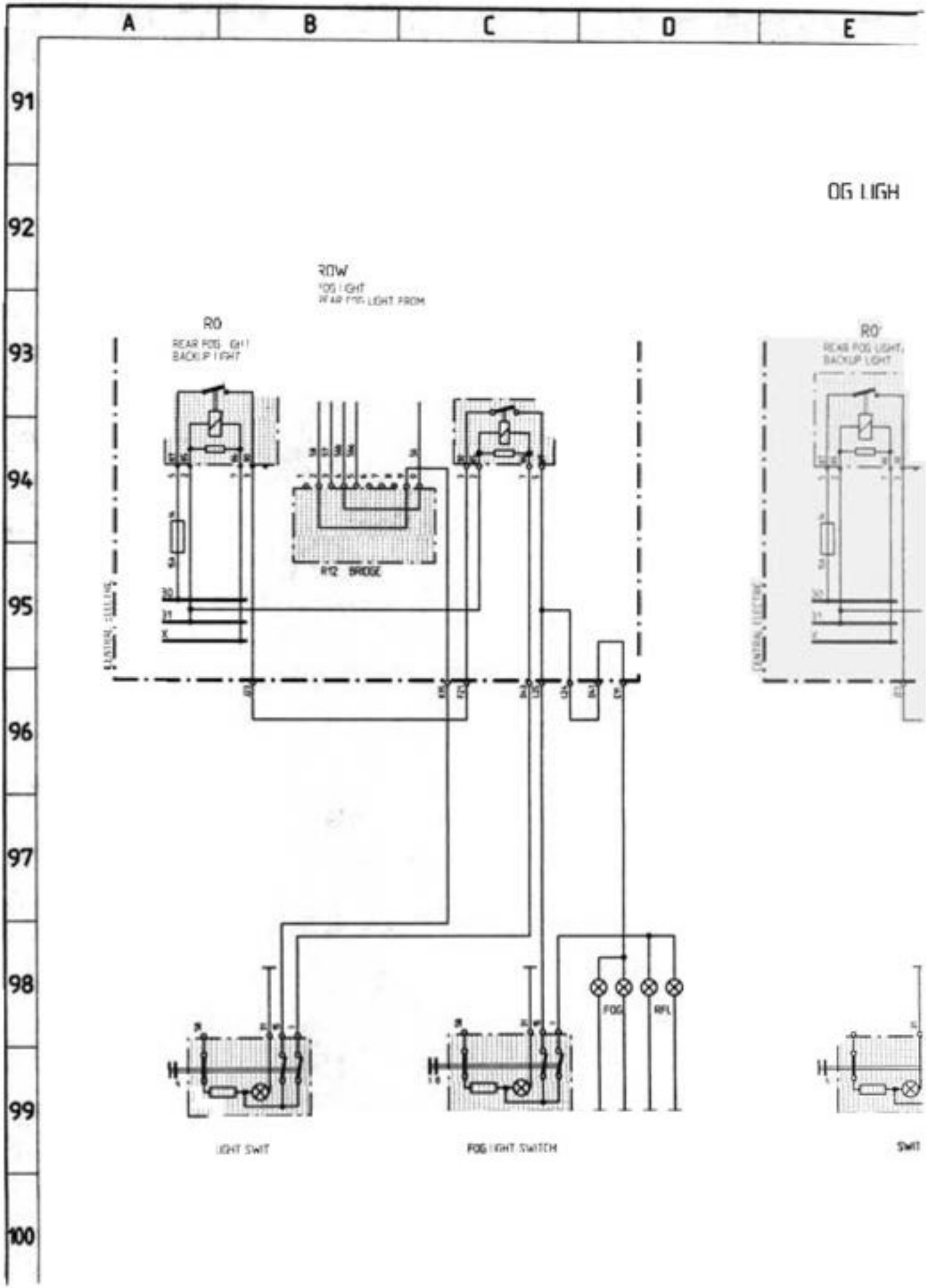

AND REAR FOG LIGHT-WIRINGS

M487-NORWAY
FOG LIGHT + REAR FOG LIGHT
ONLY WITH S7

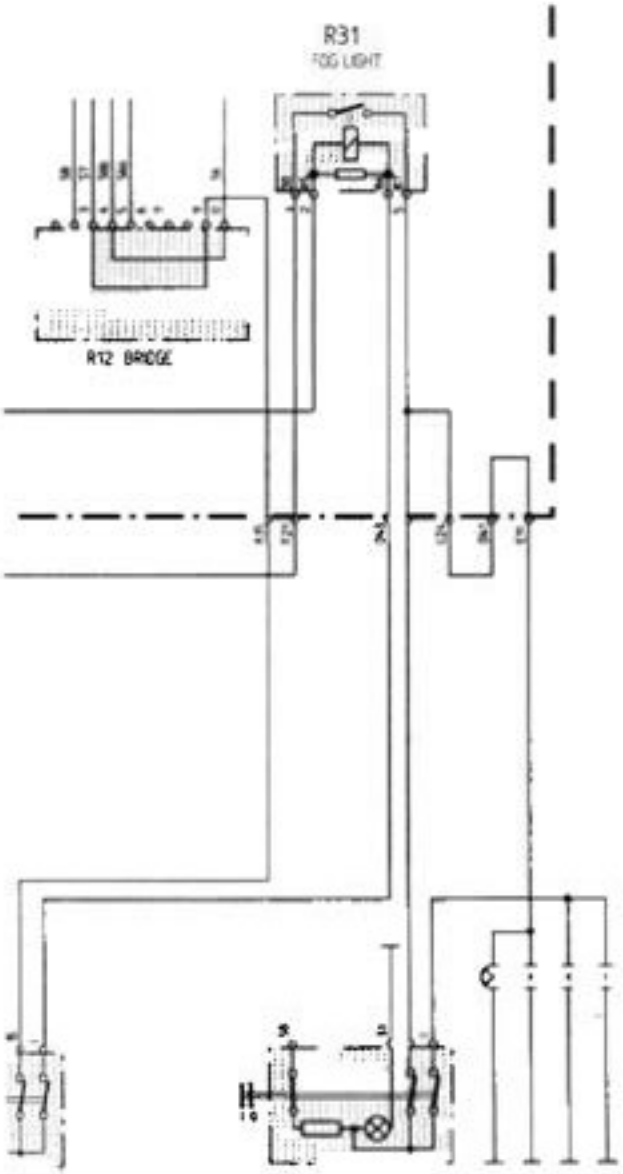

REAR FOG LIGHT SWITCH

M553-USA
FOG LIGHT WITH S6b

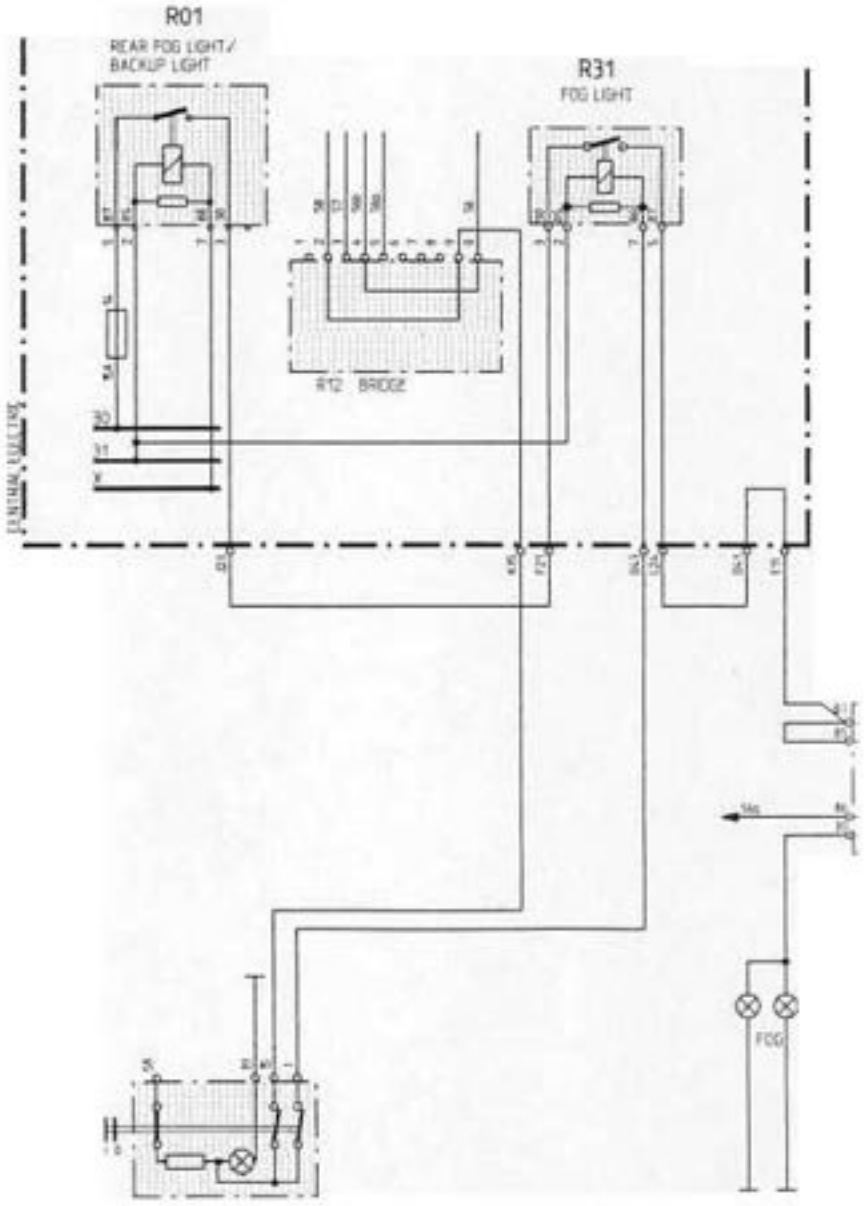

FOG LIGHT SWITCH

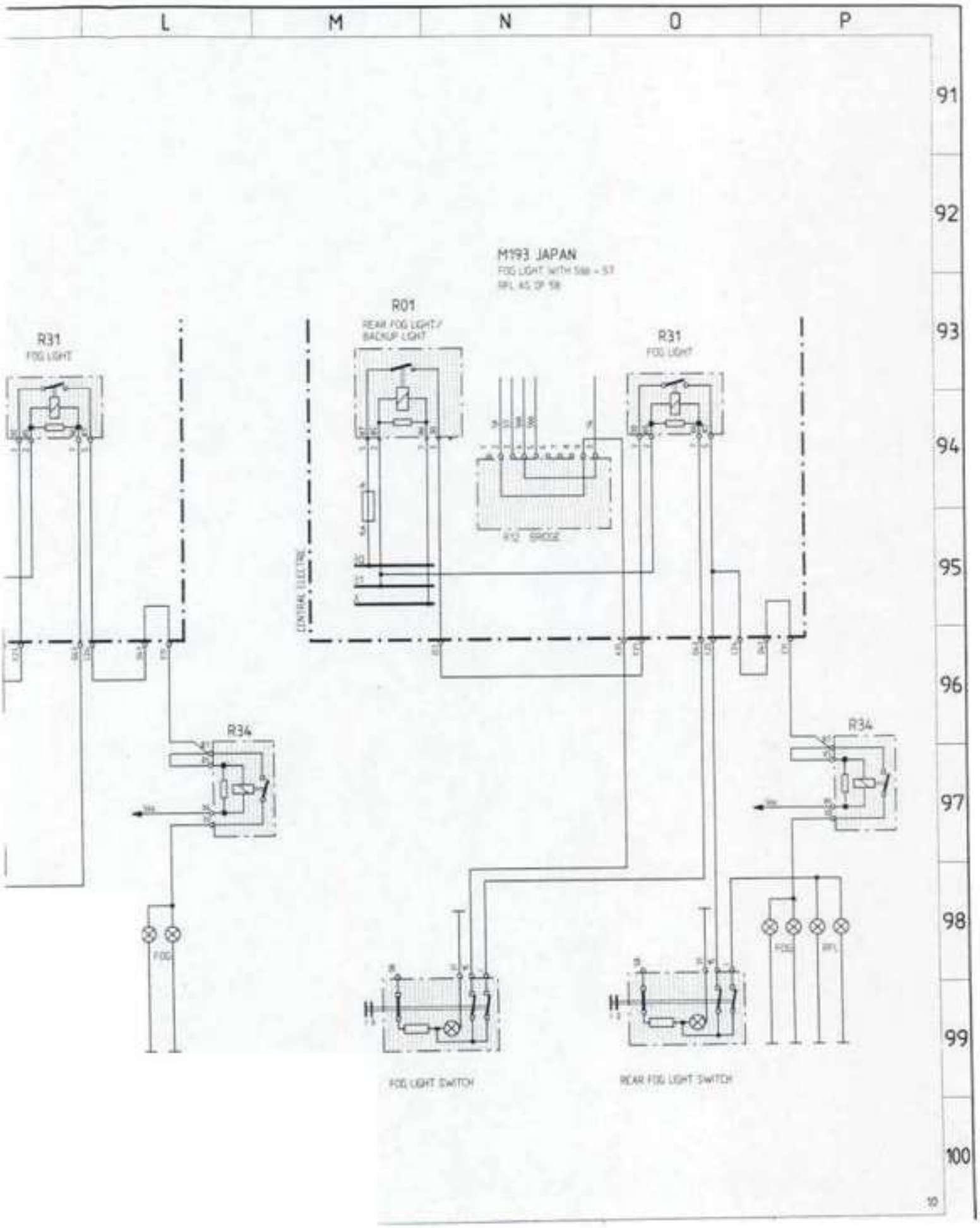
L
M
N
O
P
91
92
93
94
95
96
97
98
99
100
M193 JAPAN
R01
REAR FOG LIGHT/
BACKUP LIGHT
R31
FOG LIGHT
R31
FOG LIGHT
R12 BRIDGE
CENTRAL ELECTRIC
R34
R34
FOG
FOG
RFL
FOG LIGHT SWITCH
REAR FOG LIGHT SWITCH

911 Carrera (993) MODEL 95/2 SHEET 11

ANTI-DRIVE-OFF DEVICE (M530)

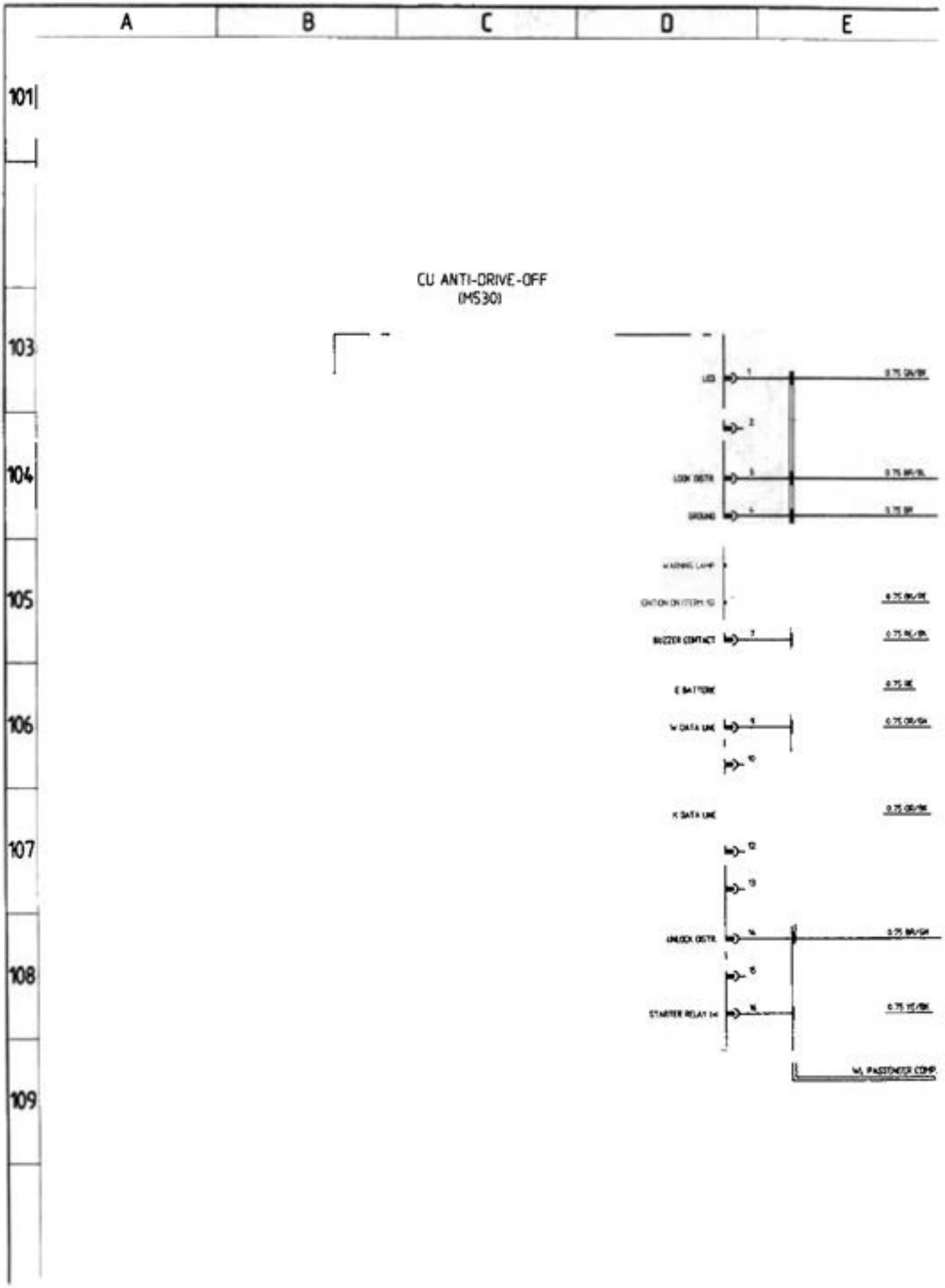

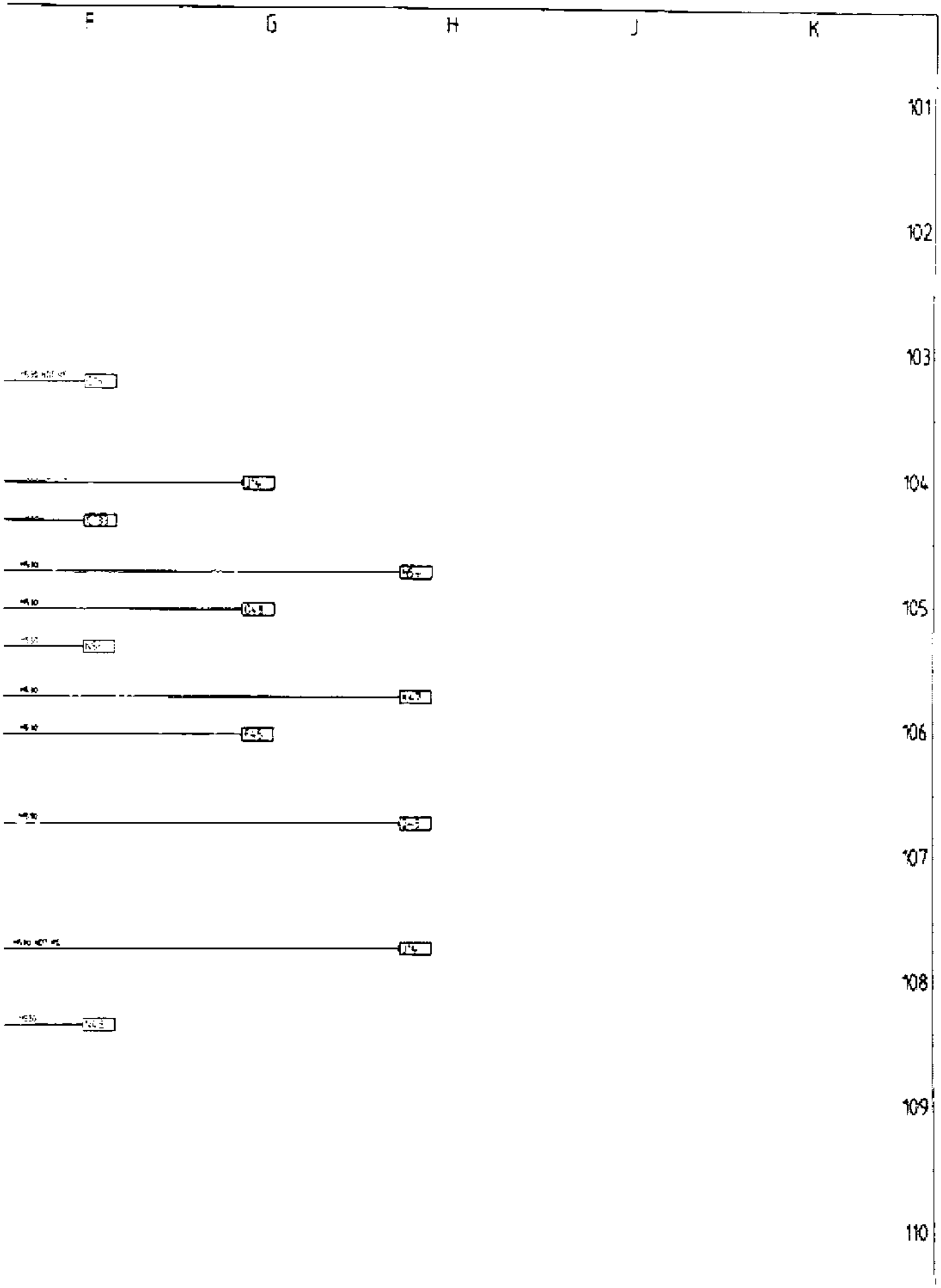
F
G
H
J
K
101
102
103
104
105
106
107
108
109
110

911 Carrera (993) MODEL 95/2 SHEET 12

AIRBAG

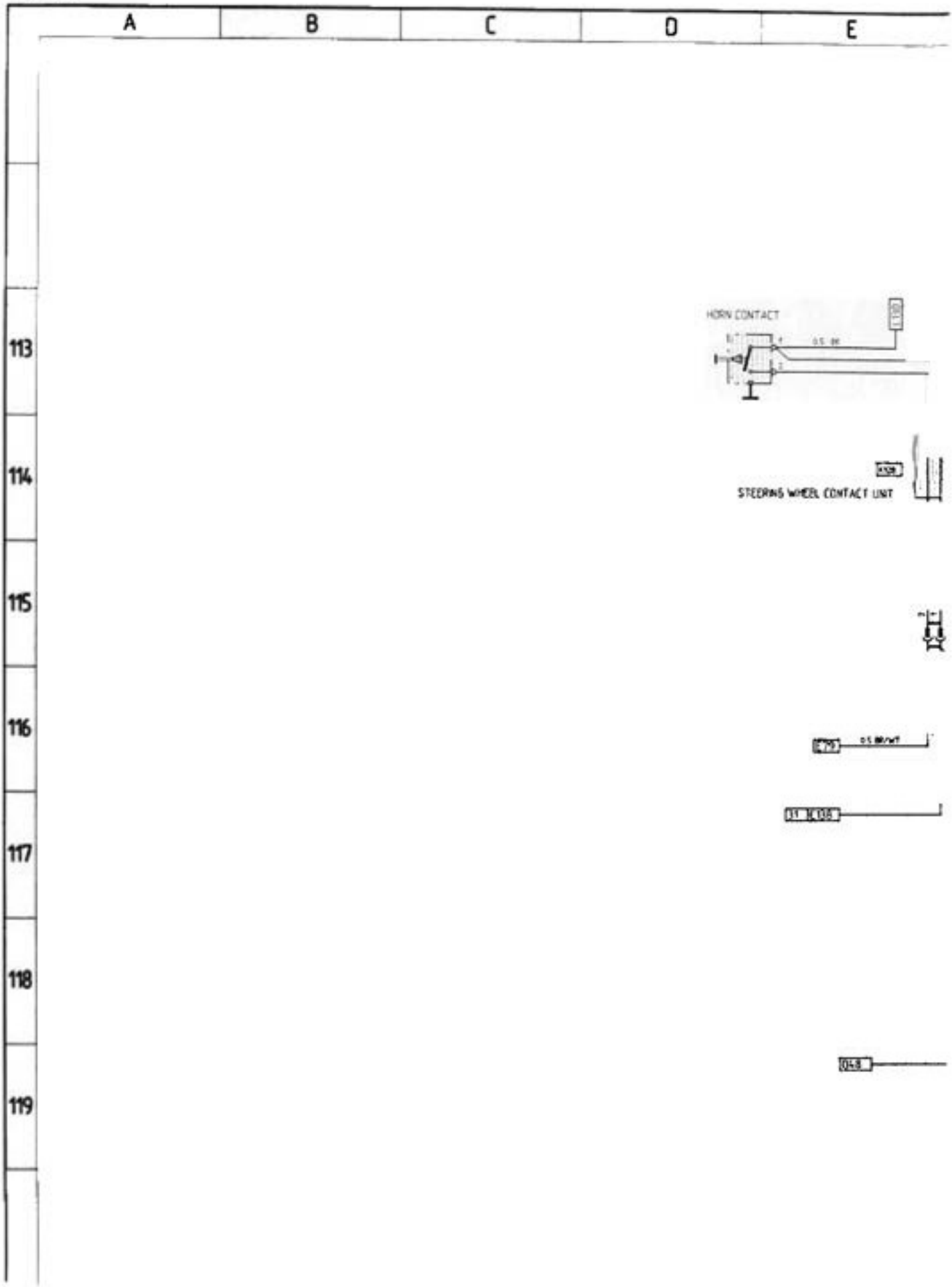

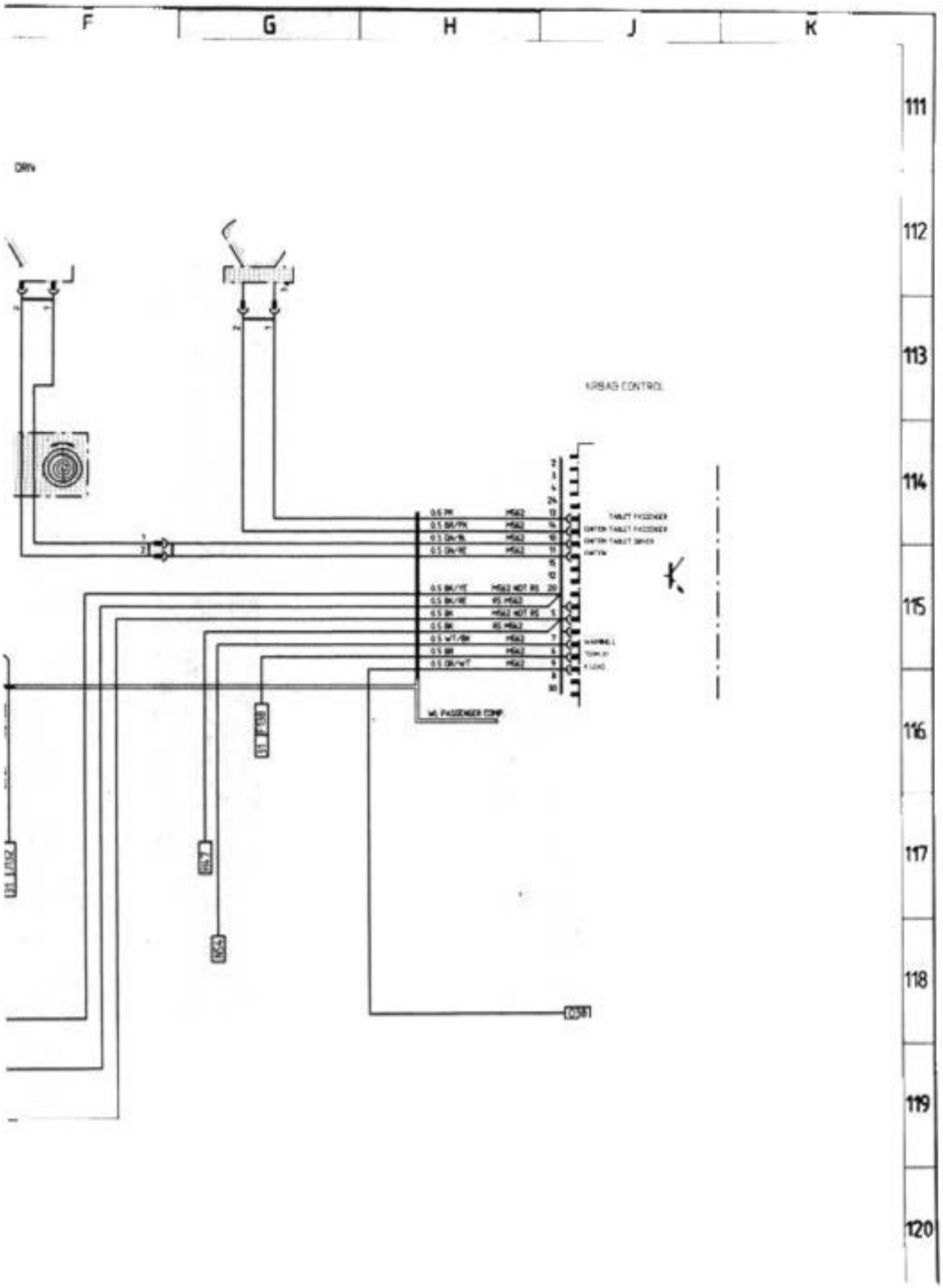
F
G
H
J
K
111
112
113
114
115
116
117
118
119
120
DRIV
AIRBAG CONTROL
TWILIGHT PASSENGER
DAYTIME TWILIGHT PASSENGER
DAYTIME TWILIGHT DRIVER
DAYTIME
WARNING L
TURN SIG
K LOAD
W. PASSENGER TEMP.
0.5 PK
0.5 BK/PK
0.5 DK/BL
0.5 DK/RE
0.5 BK/YE
0.5 BK/RE
0.5 BK
0.5 BK
0.5 VIT/BK
0.5 BR
0.5 DK/VIT
MS62
MS62 NOT RS
RS MS62
MS62 NOT RS
RS MS62
MS62
MS62
MS62
24
13
14
10
11
15
12
20
5
7
6
9
8
30
K

911 Carrera (993) MODEL 95/2 SHEET 13

TIPTRONIC-TRANSMISSION

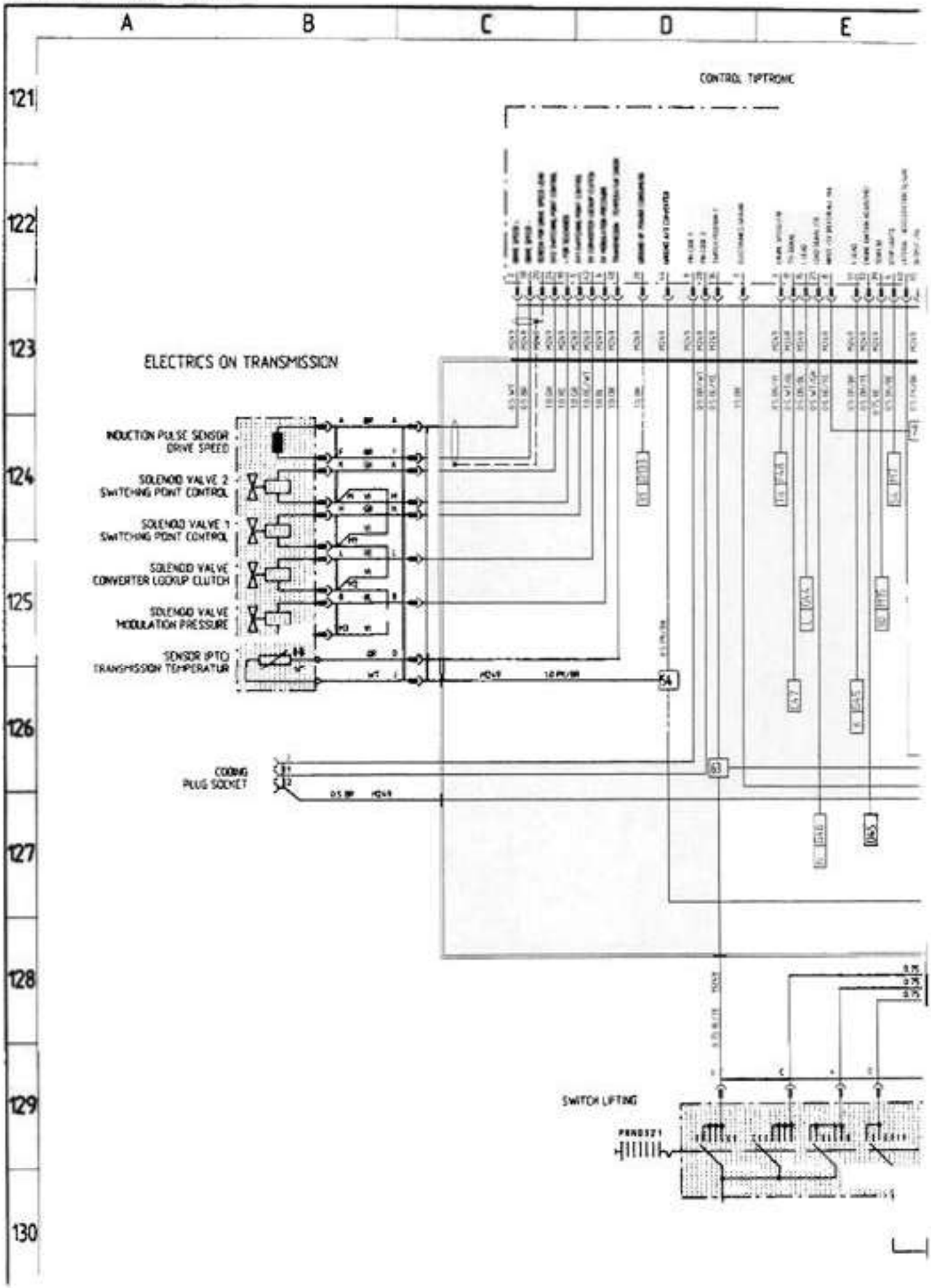

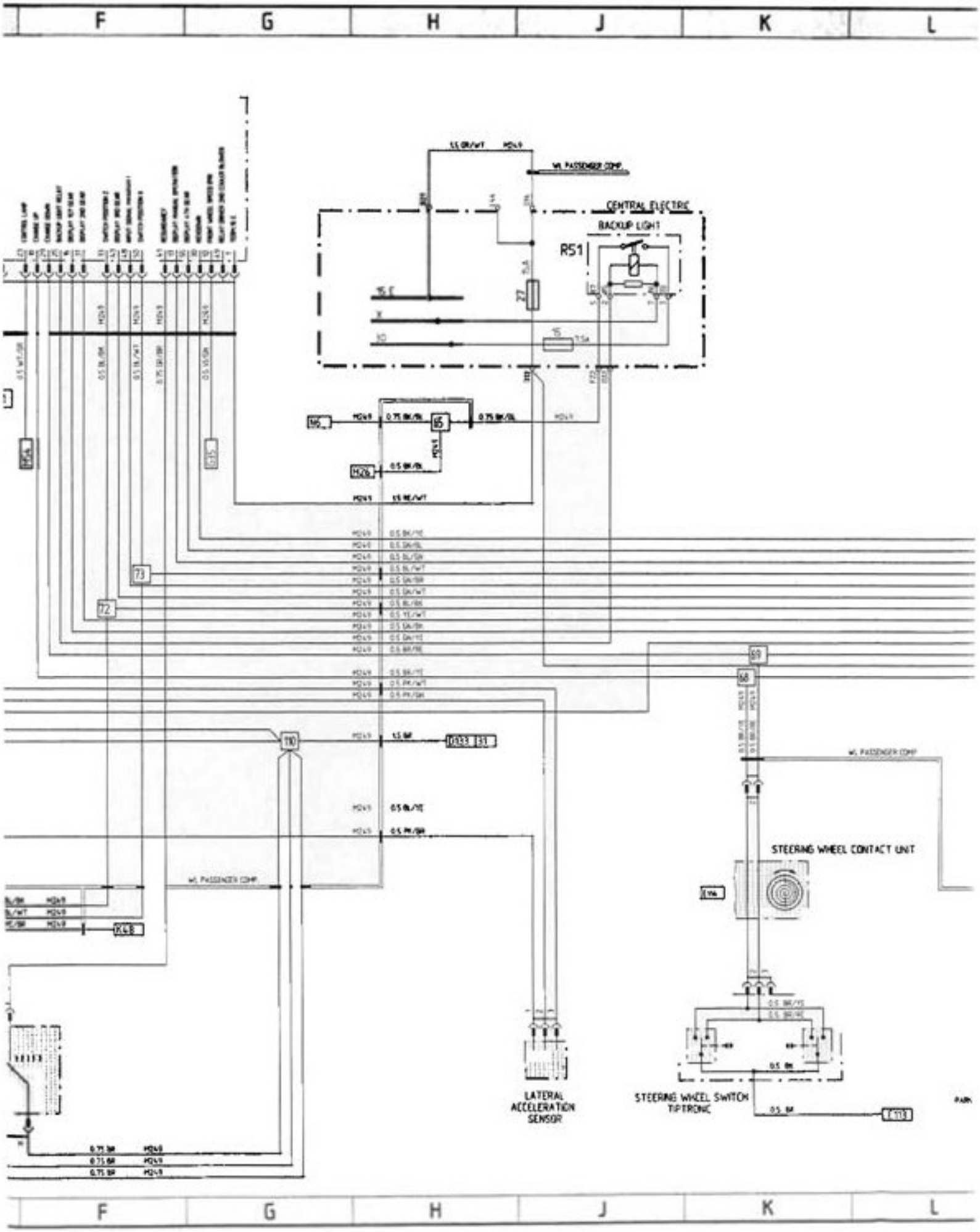
F
G
H
J
K
L
CENTRAL ELECTRIC
BACKUP LIGHT
R51
Z7
15 C
X
XO
F5
7.5A
M6
M5
H26
73
72
110
W. PASSENGER COMP.
STEERING WHEEL CONTACT UNIT
LATERAL ACCELERATION SENSOR
STEERING WHEEL SWITCH TIPTRONIC

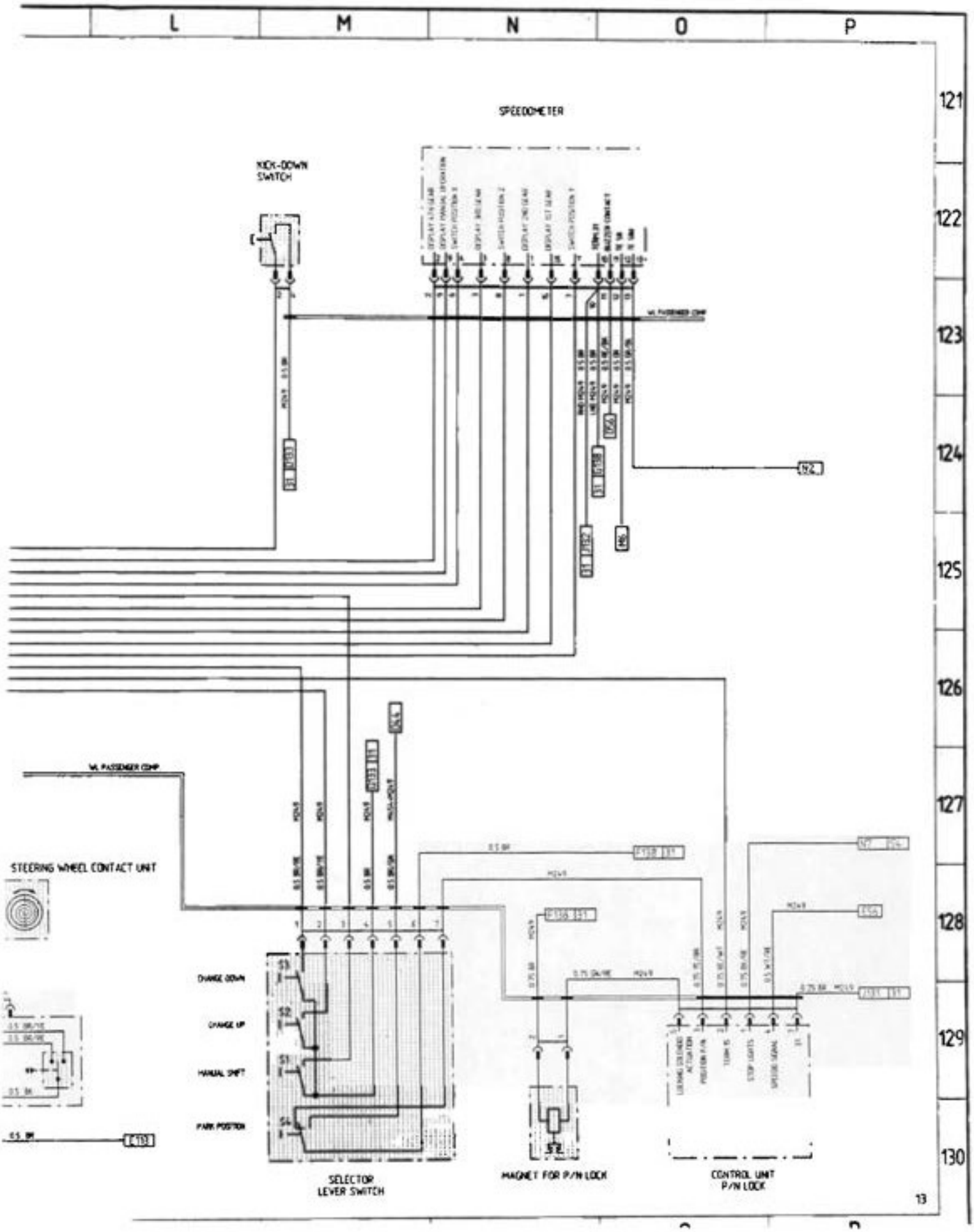
L
M
N
O
P
121
122
123
124
125
126
127
128
129
130
SPEEDOMETER
KICK-DOWN SWITCH
STEERING WHEEL CONTACT UNIT
CHANGE DOWN
CHANGE UP
MANUAL SHIFT
PARK POSITION
SELECTOR LEVER SWITCH
MAGNET FOR P/N LOCK
CONTROL UNIT P/N LOCK
13

911 Carrera (993) MODEL 95/2 SHEET 14

GROUND POINTS

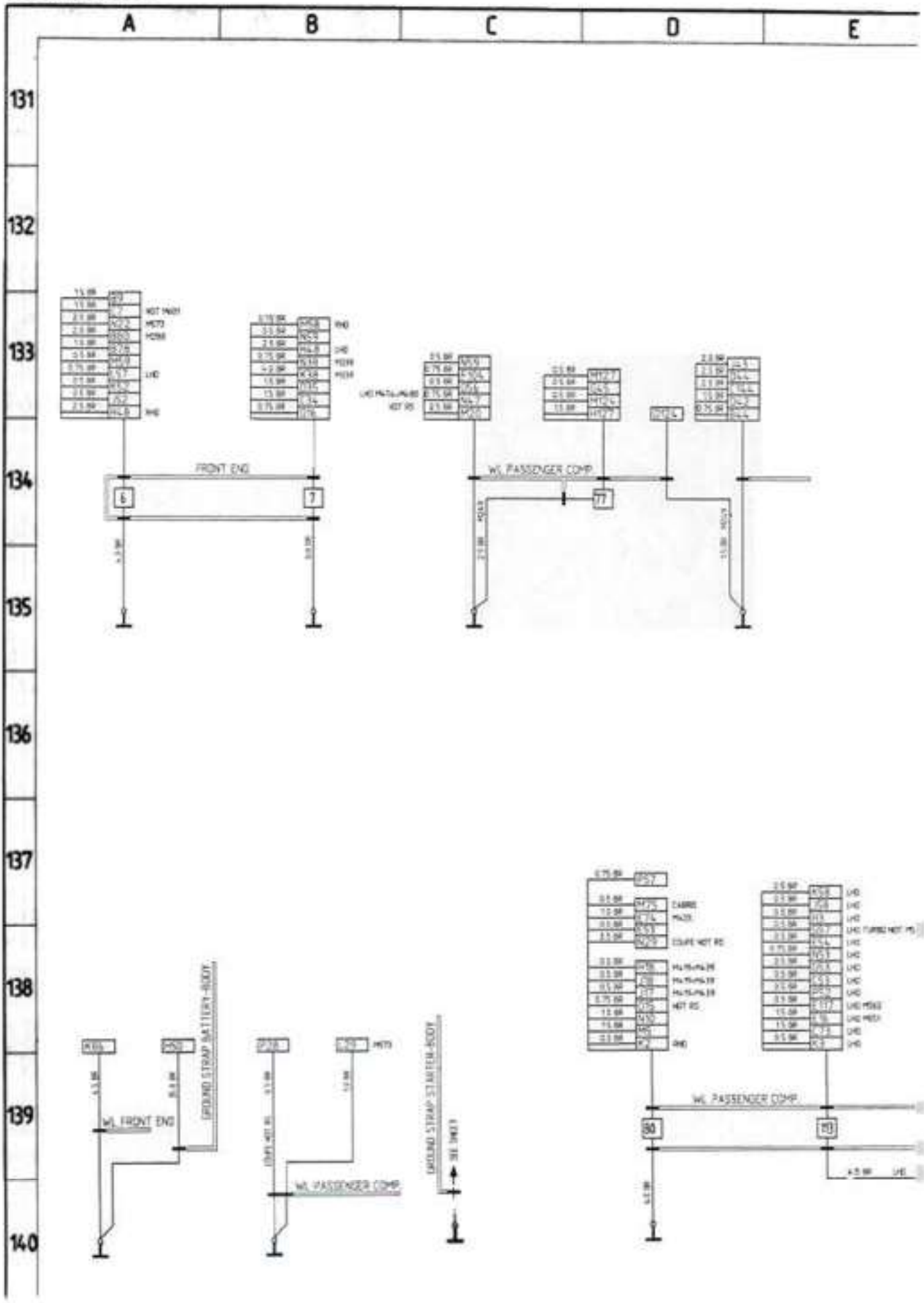

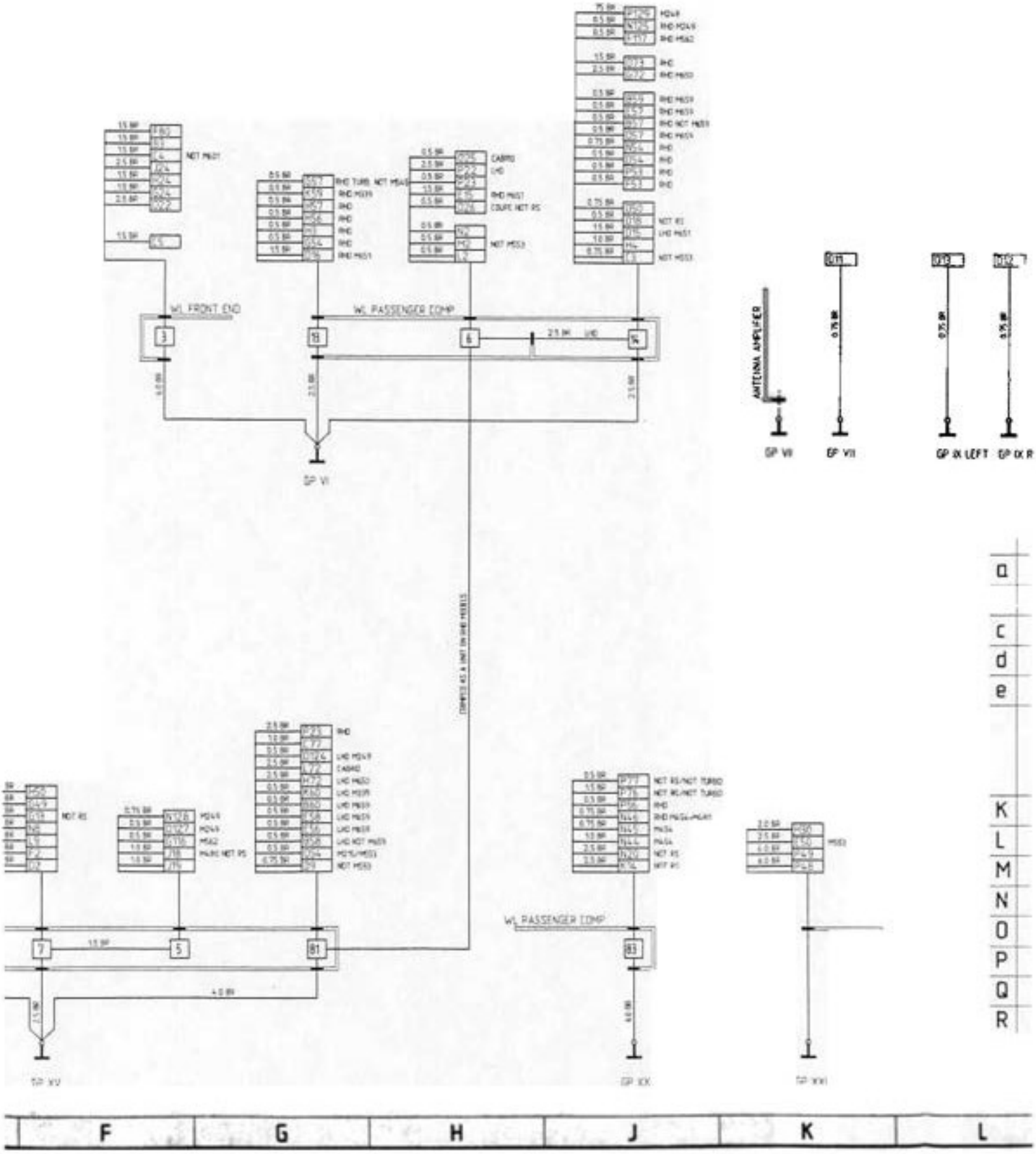
WL FRONT END
WL PASSENGER COMP
ANTENNA AMPLIFIER
GP VI
GP VII
GP VII
GP IX LEFT
GP IX R
WL PASSENGER COMP
GP XV
GP XX
GP XXI
a
c
d
e
K
L
M
N
O
P
Q
R
F
G
H
J
K
L

L M N O P

CODE	NOTE	POSITION IN VEHICLE
GP I	LUGGAGE COMPARTMENT, WHEEL HOUSING LEFT	2cP
GP II	LUGGAGE COMPARTMENT, WHEEL HOUSING RIGHT	--
[illegible]	GROUND OF POWER CONSUMERS, UNDER SEAT LEFT	
[illegible]	ENGINE ELECTRONICS/TIPTRONIC	--
[illegible]	CENTRAL ELECTRIC, ON SIDE MEMBER RIGHT	---
[illegible]	ANTENNA AMPLIFIER ON SIDE MEMBER LEFT	---
GP VIII	INSIDE LIGHT CONVERTIBLE, ROOF CENTRE FRONT	--
GP IX	INSIDE LIGHT, ROOF RIGHT	
GP X	INSIDE LIGHT, ROOF LEFT	11aP
GP X	BATTERY, LUGGAGE COMPARTMENT LEFT	3cP
GP XI	GROUND STRAP (STARTER, TRANSMISSION, ENGINE, BODY)	
GP XII	ENGINE COMPARTMENT REAR LEFT	
GP XIV	ENGINE COMPARTMENT REAR RIGHT	---
GP XV	INSTRUMENTS, SIDE MEMBER LEFT	--
GP XX	SEAT CROSS MEMBER UNDER SEAT RIGHT	
GP XXI	GROUND OF POWER CONSUMERS, CAMSHAFT CASING CYL.3	15cP

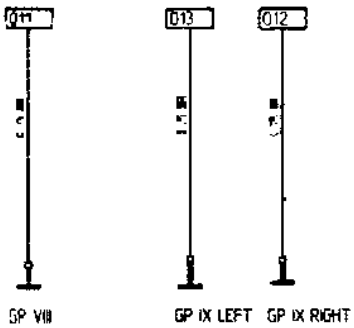

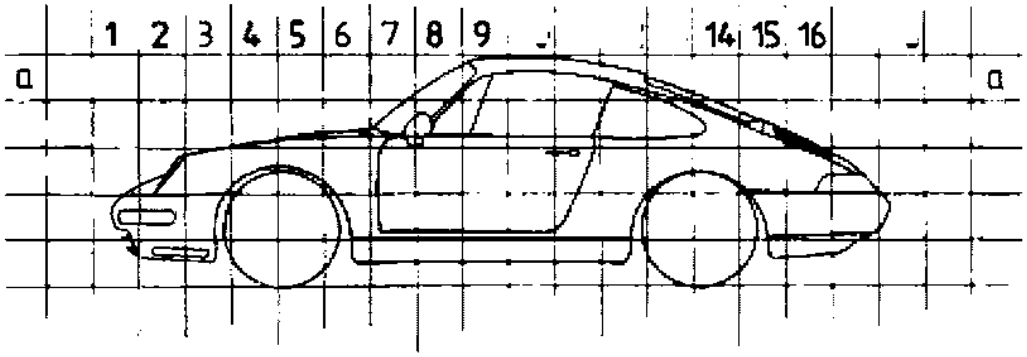

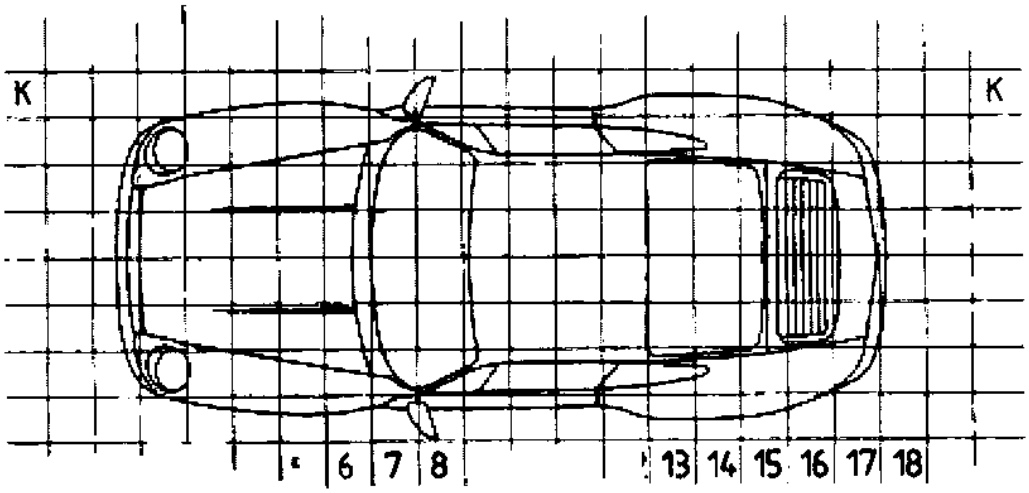

131 132 133 134 135 136 137 138 139 140

911 Carrera (993) MODEL 95/2 SHEET 15

CONSTRUCTION COMPONENTS

A B C D E

CONSTRUCTION COMPONENTS

DESIGNATION, FUNCTION	POSITION IN VEHICLE LHD	RHD	NOTE	FIELD WIRING
ALARM HORN	13bP	13bP	REAR LH CROSSMEMBER	J20
	7bL	7bQ	IN LUGGAGE COMPARTMENT	
	3bP	3bP	IN LUGGAGE COMPARTMENT	
	4cL	4cL	IN LUGGAGE COMPARTMENT RIGHT	
AMPLIFIER	9eM	9eM	UNDER THE SEAT RIGHT	
BLOWER FINAL STAGE	6bM	6bN	IN LUGGAGE COMPARTMENT	
	16cQ	16cQ	ON ENGINE	H30
	6cM	6cM	IN LUGGAGE COMPARTMENT	G30
	6cP	6cP	IN LUGGAGE COMPARTMENT	F30
	1mQ	1dQ	IN LUGGAGE COMPARTMENT	
	14dN	14dN	BY TRANSMISSION RIGHT	
	2dQ	2dQ	IN WHEEL HOUSING FRONT LEFT	
	6dP	6dN	BY CLUTCH PEDAL UNDER FLOOR PANEL	
	16cP	16cP	CARRIER PLATE IN ENGINE COMPARTMENT	
	2dM	2dM	IN LUGGAGE COMPARTMENT	
	6cQ	6cQ	ON INTRUMENT PANEL	
	9eM	9eM	UNDER THE SEAT RIGHT	
	10dP	10dP	UNDER THE SEAT LEFT	
	7cM	7cP	ON RH SIDE OF TRANSVERSE WALL	
	7cQ	7cN	ON INTRUMENT PANEL	
	6cM	6cM	CENTRAL ELECTRIC	
	6cM	6cM	IN LUGGAGE COMPARTMENT	—
CENTRAL INFORMER	7cP	7cM	ON FIREWALL	H32
DIAGNOSIS CONNECTION	7cL	7cQ	IN PASSENGER'S FOOTWELL	G50
ENGINE SPEED SENSOR				
ENGINE TEMPERATURE SENSOR				
FLASHER				
FUEL PUMP	6eM	6eP	BEHIND THE BASE	
FUSES ENGINE COMPARTMENT	16cP	16cP	CARRIER PLATE IN ENGINE COMPARTMENT	L28
FUSE IN LUGGAGE COMPARTMENT	4cP	4cP	BELOW HYDRAULIC UNIT COVER	Q37/1
FUEL LEVEL SENSOR	5cM	5cP	IN FUEL TANK	K51
GONG RELAY	7bQ	—	LH SIDE IN FRONT OF INSTRUMENTS	P53/1
HALL SENSOR	17cQ	17cQ	ON DISTRIBUTOR	
HYDRAULIC UNIT ABS	3dP	3dP	IN LUGGAGE COMPARTMENT	
HEADLIGHT CLEANER PUMP	3cQ	3cQ	BY WASHING FLUID RESERVOIR IN WHEEL HOUSING FL	A79/
HEADLIGHT CLEANER RELAY	6cM	6cM	CENTRAL ELECTRIC	E78
IDLE SPEED POSITIONER	15bN	15bN	ON ENGINE	H/14
IGNITION CONTROL UNIT	11dP	11dP	UNDER THE SEAT LEFT	
IGNITION COIL I	17cP	17cP	ON ENGINE	L41
IGNITION COIL II	17cP	17cP	ON ENGINE	L41
KICK-DOWN SWITCH	6dQ	6dM	BY ACCELERATOR PEDAL UNDER FLOOR PANEL	H122
KNOCK SENSOR CYL 1-3	15cP	15cP	ON ENGINE	A47
	16cN	16cN	ON ENGINE	A47
LATERAL ACCELERATION SENSOR TIPTRONIC TRANSMISSION				
LIGHTS ON BUZZER				
MFI + DI RELAY	6cM	6cM	CENTRAL ELECTRIC	J44
MFI + DI CONTROL UNIT	9eP	9eP	UNDER THE SEAT LEFT	B-G4
	16cQ	16cQ	ON ENGINE	A43
MICRO SWITCH ROOF RIGHT	9cN	9cN	AT CONVERTIBLE TOP FRAME	M79
MICRO SWITCH ROOF LEFT	9cQ	9cQ	AT CONVERTIBLE TOP FRAME	L79
MICRO SWITCH REAR SPOILER EXTENDED	16cP	16cP	ON TAILGATE	Q79
MICRO SWITCH REAR SPOILER RETRACTED	16cP	16cP	ON TAILGATE	Q79

DESIGNATION, FUNCTION	POSITION IN VEHICLE LHD	POSITION IN VEHICLE RHD	NOTE	FIELD IN WIRING DIAGRAM
MICRO SWITCH TDC	12cL	12cL	BEHIND SIDE PANEL COVERING	D71
	12cL	12cL	BEHIND SIDE PANEL COVERING	P71
	12cN	12cN	IN ROOF	G73
MOTOR TOP CONTROL RIGHT	15cN	15cN	BEHIND REAR SEAT	N71
MOTOR TOP CONTROL LEFT	15cO	15cO	BEHIND REAR SEAT	M71
MOTOR TOP LOCK RIGHT	9cN	9cN	AT CONVERTIBLE TOP FRAME	K/L79
	9cO	9cO	AT CONVERTIBLE TOP FRAME	J/K79
	16cP	16cP	ON ENGINE	G30
	15cN	15cN	ON ENGINE	A42
OUTSIDE TEMP. SENSOR	2dP	2dP	FRONT LH BUMPER	A60
OXYGEN SENSORS CYL 1-3	16cP	16cP	ON ENGINE	F150
OXYGEN SENSORS CYL 4-6	16cM	16cM	ON ENGINE	D150
OIL PRESSURE SENSOR/SWITCH	14cN	14cN	ON ENGINE	A54
OIL COOLER BLOWER	2dL	2dL	IN WHEEL HOUSING FRONT RIGHT	D21
OIL LEVEL SENSOR	12cK	12cK	IN WHEEL HOUSING REAR RIGHT	E51
OIL TEMPERATURE SENSOR FOR INSTRUMENT	14cN	14cN	ON ENGINE	A53
OIL TEMPERATURE SENSOR FOR OIL COOLER BLOWER	2dL	2dL	IN WHEEL HOUSING FRONT RIGHT	J21
PRESSURE TRANSDUCER, CHARGE AIR PRESSURE	16cM	16cM	ON ENGINE	A56
PRESSURE SWITCH AIR CONDITIONING SYSTEM	6dO	6dO	IN LUGGAGE COMPARTMENT	E30
PRESSURE WARNING SWITCH	7dO	7dO	IN LUGGAGE COMPARTMENT	M/N39
REAR FOG LIGHT CUTOUT RELAY	17dN	17dN	BEHIND REAR PANEL	H108
REAR WINDOW WIPER RELAY	15cO	15cO	ON REAR WINDOW WIPER MOTOR	E71
	16cP	16cP	IN ENGINE COMPARTMENT	J30
	2dQ	2dQ	IN WHEEL HOUSING FRONT LEFT	M21
RESISTOR OIL COOLER BLOWER	2dL	2dL	IN WHEEL HOUSING FRONT RIGHT	
RELAY CONDENSER BLOWER	6cM	6cM	CENTRAL ELECTRIC	L21
RELAY AC COMPRESSOR	16cP	16cP	CARRIER PLATE IN ENGINE COMPARTMENT	L30
RELAY TWO-TONE HORN	6cM	6cM	CENTRAL ELECTRIC	F78
RELAY POWER WINDOW	6cM	6cM	CENTRAL ELECTRIC	K18/19
RELAY BLOWER ENGINE COMPARTMENT	16cP	16cP	CARRIER PLATE IN ENGINE COMPARTMENT	J/K30
RELAY STARTER TIPTRONIC-TRANSMISSION	6cM	6cM	CENTRAL ELECTRIC	N50
RELAY BACKUP LIGHT	7bO	7bO	IN LUGGAGE COMPARTMENT LEFT	
RELAY THERMO SWITCH CATALYTIC CONVERTER	6cM	6cM	CENTRAL ELECTRIC	L/M51
RELAY TERM X	6cM	6cM	CENTRAL ELECTRIC	J/K44
RELAY TERM 15 E	6cM	6cM	CENTRAL ELECTRIC	K/L44
RELAY RFL - BACKUP LIGHT	6cM	6cM	CENTRAL ELECTRIC	J/K7, A-M94
RELAY FRONT FOG LAMP	6cM	6cM	CENTRAL ELECTRIC	J7, C-094
RELAY OIL COOLER BLOWER	6cM	6cM	CENTRAL ELECTRIC	K21
	4cL	4cL	IN LUGGAGE COMPARTMENT RIGHT	M39
	6cM	6cM	CENTRAL ELECTRIC	H75
RELAY DAYTIME RUNNING LIGHT CANADA	6cM	6cM	CENTRAL ELECTRIC	D1
RELAY FOG LIGHT SWITCH OFF USA/JAPAN	6cM	6cM	CENTRAL ELECTRIC	H-P/96, F/S10
SECONDARY AIR PUMP RELAY	17cP	17cP	ON CARRIER ON LH SIDE IN ENGINE COMPARTMENT	A50
STOP LIGHT SWITCH	6dP	6dM	AT THE BRAKE PEDAL BELOW THE FLOOR PANEL	N9
	12dO	12dO	ON GEARBOX	D-F129
SHIFT VALVE RESONANCE FLAP		15dN	ON ENGINE	H41
STARTER	14dN	14dN	BY CLUTCH HOUSING RIGHT	P49/50
SECONDARY AIR PUMP	16cN	16cN	ON ENGINE	D/E50
	15dN	15dN	ON THROTTLE VALVE ASSEMBLY	A44
TIMING VALVE	16cM	16cM	ON ENGINE	L150
TANK VENTING VALVE	16cP	16cP	ON ENGINE	K41
TWO-TONE HORN I	3cL	3cL	IN WHEEL HOUSING FRONT RIGHT	F80
TWO-TONE HORN II	3cL	3cL	IN WHEEL HOUSING FRONT RIGHT	G80
V-BELT CONTROL	17dO	17dO	ON ENGINE REAR MIDDLE	A55
WINDSHIELD WASHING FLUID PUMP	3cQ	3cQ	BY WASHING FLUID RESERVOIR IN WHEEL HOUSING FL	A79
WIPER INTERMITTENT CONTROL RELAY	6cM	6cM	CENTRAL ELECTRIC	F/S75

L	M	N	O	P

FIELD IN WIRING DIAGRAM
[illegible]
[illegible]
[illegible]
[illegible]
[illegible]
[illegible]
[illegible]
530
[illegible]
[illegible]
[illegible]
[illegible]
[illegible]
[illegible]

911 Carrera (993) MODEL 95/2 SHEET 16

CONNECTORS AND ABBREVIATIONS

A B C D E

PLUG CONNECTIONS

CODE	NUMBER OF PINS	DESIGNATION, FUNCTION	POSITION IN VEHICLE LHD	POSITION IN VEHICLE RHD	NOTE
[illegible]	[illegible]	[illegible]	[illegible]	6cL	
[illegible]	[illegible]	CONNECTION WL PASSENGER COMPARTMENT/ WL FRONT END	[illegible]	[illegible]	
[illegible]	[illegible]	CONNECTION WL PASSENGER COMPARTMENT/ WL MOTOR	16cP	16cP	CARRIER PLATE
[illegible]	[illegible]	CONNECTION WL PASSENGER COMPARTMENT/ WL [illegible]	9aP	9aP	UNDER THE SEA
[illegible]	[illegible]	CONNECTION WL PASSENGER COMPARTMENT/ WL [illegible]	9aP	9aP	UNDER THE SEA
[illegible]	[illegible]	CONNECTION WL PASSENGER COMPARTMENT/ WL DOOR DRIVER'S SIDE	6cD	6cL	UNDER THE INST
[illegible]	[illegible]	CONNECTION WL PASSENGER COMPARTMENT/ WL DOOR DRIVER'S SIDE	6cD	6cL	UNDER THE INST
[illegible]	[illegible]	CONNECTION WL PASSENGER COMPARTMENT/ WL DOOR PASSENGER'S SIDE	6cL	6cD	UNDER THE INST
[illegible]	[illegible]	CONNECTION WL PASSENGER COMPARTMENT/ WL DOOR PASSENGER'S SIDE	6cL	6cD	UNDER THE INST
[illegible]	[illegible]	CONNECTION WL PASSENGER COMPARTMENT/ WL HEATER, AIR CONDITIONER	6cM	6cM	UNDER INSTRUME
X24	10	CONNECTION WL PASSENGER COMPARTMENT/ WL TAILGATE	[illegible]	16cL	BOX RH SIDE OF
X25	[illegible]	CONNECTION WL PASSENGER COMPARTMENT/ WL TAIL LIGHTS	[illegible]	16cL	BOX RH SIDE OF
X26	[illegible]	CONNECTION WL PASSENGER COMPARTMENT/ WL CONVERTIBLE TOP	12cL	12cL	BEHIND SIDE PAN
X28	[illegible]	CONNECTION WL PASSENGER COMPARTMENT/ WL CAN ON LINE	6cP	[illegible]	ON STEERING CO
X29	[illegible]	CONNECTION WL PASSENGER COMPARTMENT/ WL "AIR" SENSOR	[illegible]	16cL	BOX RH SIDE OF
X31	[illegible]	CONNECTION WL PASSENGER COMPARTMENT/ WL SIDE LIGHTS COUPE	150M	150M	BELOW THE PAR
X32	[illegible]	CONNECTION WL PASSENGER COMPARTMENT/ WL [illegible]	[illegible]	[illegible]	UNDER INSTRUME
X33	[illegible]	CONNECTION WL PASSENGER COMPARTMENT/ WL SIDE TURN SIGNAL LEFT	7bG	7bG	IN LUGGAGE COM
X34	[illegible]	CONNECTION WL PASSENGER COMPARTMENT/ WL SIDE TURN SIGNAL RIGHT	7bL	7bL	IN LUGGAGE COM
X36	[illegible]	CONNECTION WL PASSENGER COMPARTMENT/ SWITCH LIFTING CONVERTIBLE TOP	[illegible]	[illegible]	BEHIND SIDE PAN
X37	[illegible]	CONNECTION WL PASSENGER COMPARTMENT/ WL SEAT LEFT	[illegible]	[illegible]	UNDER THE DRIV
X38	[illegible]	CONNECTION WL PASSENGER COMPARTMENT/ WL SEAT RIGHT	9aP	9aP	UNDER THE PAS
X39	6	CONNECTION WL PASSENGER COMPARTMENT/ WL LUGGAGE COMPARTMENT HOOD	7bL	7bL	ON RH SIDE OF
X40	[illegible]	CONNECTION WL MOTOR/ WL [illegible]	16aP	16aP	CARRIER PLATE
X65	6	CONNECTION WL DOOR DRIVER'S SIDE/ WL OUTSIDE MIRROR LEFT	6cP	6cK	DRIVER'S DOOR
X66	[illegible]	CONNECTION WL DOOR PASSENGER'S SIDE/ WL OUTSIDE MIRROR RIGHT	6cR	6cR	PASSENGER'S DO
X69	[illegible]	CONNECTION WL FRONT END/ WL HEATER, AIR CONDITIONER	6cM	6cM	IN LUGGAGE COM

M - NUMBERS

M 113	CANADA VERSION (DAYTIME RUNNING LIGHT)	M 487	NORWAY
M 139	ADJUSTABLE SEAT HEATING, LEFT SEAT	M 490	AUDIO OPTION PACK
M 193	JAPAN VERSION	M 513	LUMBAR SUPPORT SEAT RIGHT
M 215	SAUDI-ARABIA VERSION	M 530	CODE LOCK
M 224	AUTOMATIC BRAKE DIFFERENTIAL	M 545	LARGE TANK
M 249	AUTOMATIC TRANSMISSION (TIPTRONIC)	M 553	USA / CANADA VERSION
M 339	FWD	M 562	AIRBAG
M 340	ADJUSTABLE SEAT HEATING, RIGHT SEAT	M 564	WITHOUT AIRBAG
M 383	SPORT SEAT LEFT ELECTRIC HEIGHT ADJUSTMENT	M 573	AIR CONDITIONING SYSTEM
M 387	SPORT SEAT RIGHT ELECTRIC HEIGHT ADJUSTMENT	M 576	WITHOUT REAR FOG LIGHT
M 419	REAR PACKAGE TRAY	M 586	LUMBAR SUPPORT SEAT LEFT
M 425	REAR WINDOW WIPER	M 601	LITRONIC
M 437	COMFORT SEAT LEFT	M 602	HIGH MOUNTED STOP LIGHT
M 438	COMFORT SEAT RIGHT	M 605	HEADLIGHT VERTICAL AIM CONTROL
M 439	ELECTRIC CONVERTIBLE TOP	M 614	TELEPHONE PREPARATION
M 441	RADIO PREPARATION	M 650	POWER SUNROOF
M 451	LIMITED RADIO PREPARATION	M 651	POWER WINDOWS
M 454	CRUISE CONTROL	M 659	ON-BOARD COMPUTER
M 480	TRANSMISSION	M 680	DIGITAL SOUND PACKAGE

CONNEC

	FIELD
ARTMENT RIGHT	G/H34,K123
	C9,E36,G48,B58/59
	K/L3,J27/28,D48/49,B53/54
	C/D45/46,B55,L143
	F45/46,B55,G/H148
	E/F16/17,B87/88, F88
UMENT PANEL DIVER'S SIDE	C16,F87/88
UMENT PANEL PASSENGER'S SIDE	[illegible]
UMENT PANEL PASSENGER'S SIDE	[illegible]
NT PANEL RIGHT	[illegible]
NGINE COMPARTMENT	[illegible]
NGINE COMPARTMENT	[illegible]
	J-M76
	[illegible]
	[illegible]
NT PANEL LEFT	[illegible]
ARTMENT ON SIDE MEMBER LEFT	[illegible]
ARTMENT ON SIDE MEMBER RIGHT	[illegible]
L COVERING	N74
R SEAT	
GER SEAT	N19,A70,E65/66
GGAGE COMP LID HINGE	016,877
ENGINE COMPARTMENT	B46,E48,K42,B55,M142,M148
	B18/19
R	B13
	G23/24

ABBREVIATIONS

CODE	MEANING	CODE	
ABC	AUTOMATIC BRAKE DIFFERENTIAL	[illegible]	FOG LI
ABS	ANTILOCK BRAKING SYSTEM	[illegible]	GROUN
AC	AIR CONDITIONING SYSTEM	[illegible]	HEADL
ADL	ADDITIONAL DRIVING LIGHTS	[illegible]	HIGH FI
BPAU	BRAKE BOOSTER	[illegible]	
BL	BACKUP LIGHT	HVAC	
CL	CLOSE	INJ. VALVE	
CLS	CENTRAL LOCKING SYSTEM	INS.C	
CU	CONTROL UNIT	K	
CWL	CENTRAL WARNING LIGHT	LED	
CE	CENTRAL ELECTRIC	[illegible]	
CP	CONNECTING POINT	[illegible]	
CLOCK	CLOCK SIGNAL		
CO	CANBUS MONITORE		
DATA	DATA SIGNAL	[illegible]	NUM
DEF	DEFROST	[illegible]	
DSP	DIGITAL SOUND PACKAGE	OP	
DP	DISCONNECTING POINT	PIN	
DI	ELECTRIC IGNITION SYSTEM with KNOCK CONTROL	POT	
ESD	ENGINE SPEED SENSOR [illegible]		
ESS	ENGINE SPEED SENSOR	PWM	PULSE
ETC	ELECTRICAL TRANSMISSION CONTROL	PL	PLUG
FA	FRONT AXLE	RA	REAR A
FL	FRONT LEFT	RL	
FR	FRONT RIGHT		

TION 2999|99

FIELD INDICATION

TERMINAL ID

P IGNITION SWITCH POSITION 0	56 LIGHT SWITCH POSITION I
X IGNITION SWITCH POSITION I-II	56a/56b HIGH BEAM/LOW BEAM
15 IGNITION SWITCH POSITION II-III	57 LIGHT SWITCH POSITION I
R IGNITION SWITCH POSITION I-II-III	58 LIGHT SWITCH POSITION I-II
K DIAGNOSIS K	58R/58L SIDE MARKER LIGHT RIGHT/LEFT
L DIAGNOSIS L	58d INSTRUMENT LIGHTS
30 PERMANENT POSITIVE	Ti INJECTION SIGNAL
31 GROUND	Tn ROTATIONAL SPEED SIGNAL
54 STOP LIGHT	61 GENERATOR D-

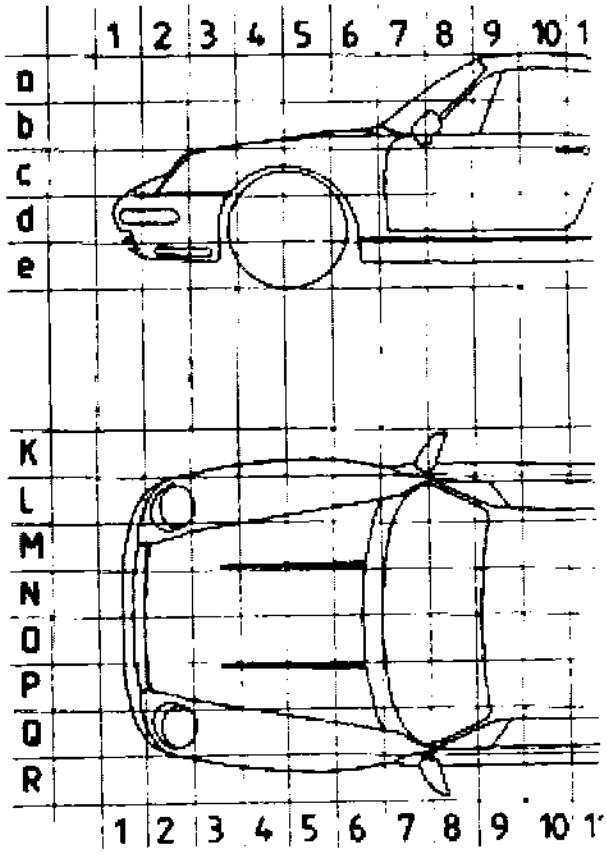

L	M	N	O	P

CODE	MEANING	CODE	MEANING
FOG	FOG LIGHT	RDK	TIRE PRESSURE CONTROL
GP	GROUND POINT	ROW	REST OF WORLD
HCS	HEADLIGHT CLEANING SYSTEM	RHD	RIGHT-HAND DRIVE
HF	HIGH FREQUENCY	RFL	REAR FOG LIGHT
HFM	HOT-FILM AIR MASS METER	SA	SALES ARABIA
HVAC	HEADLIGHT VERTICAL AIM CONTROL	SAFETY LAMP	SAFETY LAMP
INJ. VALVE	FUEL INJECTOR	SERVICE	SERVICE
INS.C	INSTRUMENT CLUSTER	SCS	COMBINED STEERING COLUMN SWITCH
IC	IGNITION CIRCUIT	SS	SPEED SENSOR
LED	LIGHT-EMITTING DIODE	THROTTLE	THROTTLE VALVE
LHD	LEFT-HAND DRIVE	TVS	THROTTLE VALVE SENSOR
LF	LOW FREQUENCY	TE	TERMINAL
MPI - DI	DIGITAL ENGINE ELECTRONICS	TEL MUTE	RADIO MUTING CONTROL
MS 2	MOTRONIC S 2	TI	INJECTION TIME
NO	NUMBER	TN	SPEED
NTC	NEGATIVE TEMPERATURE COEFFICIENT	TURBO	911 TURBO
OP	OPEN	TRP	TWIN-COIL ROTARY POSITIONER
PIN	PIN	USA	USA
POT	POTENTIOMETER	WL	WIRING LOOM
PSD	PORSCHE LIMITED SLIP DIFFERENTIAL	WP	WELD POINT
PWM	PULSE WIDTH MODULATION	WW	WORLDWIDE
PL	PLUG		
RA	REAR AXLE		
RL	REAR LEFT		
RR	REAR RIGHT		

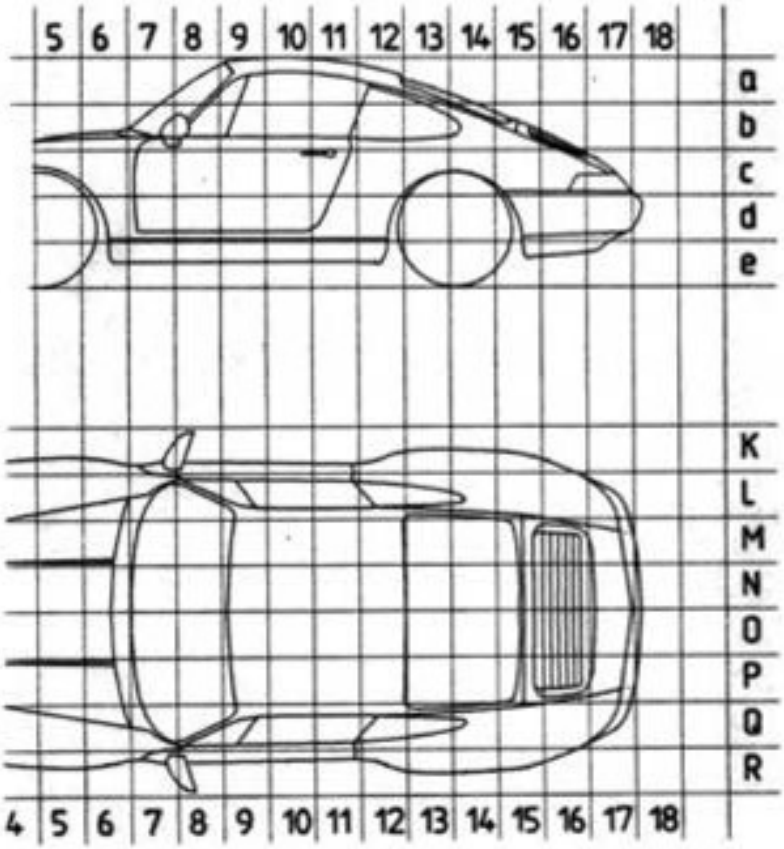

911 Carrera (993) MODEL 95/2 SHEET 17

CENTRAL ELECTRIC

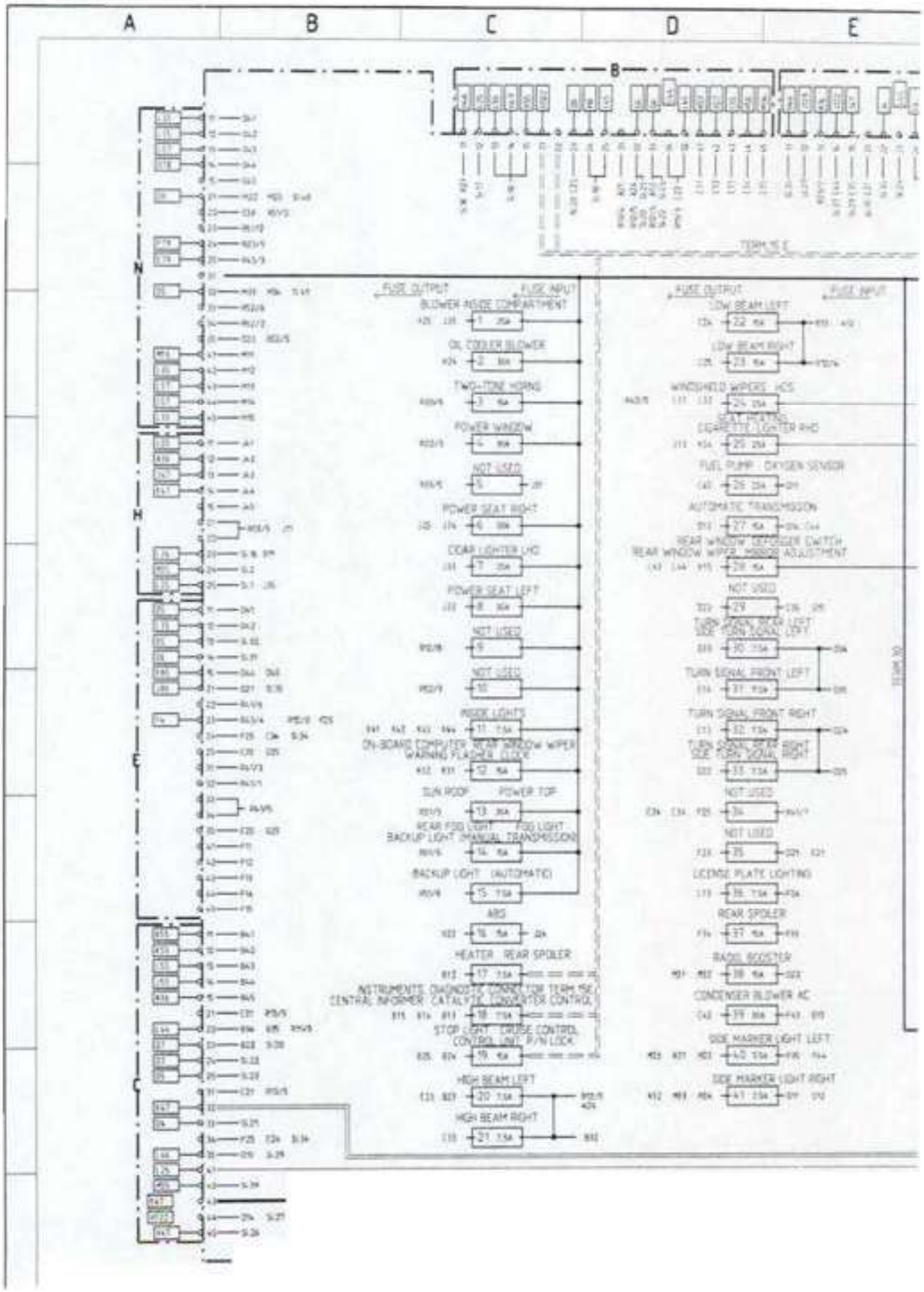

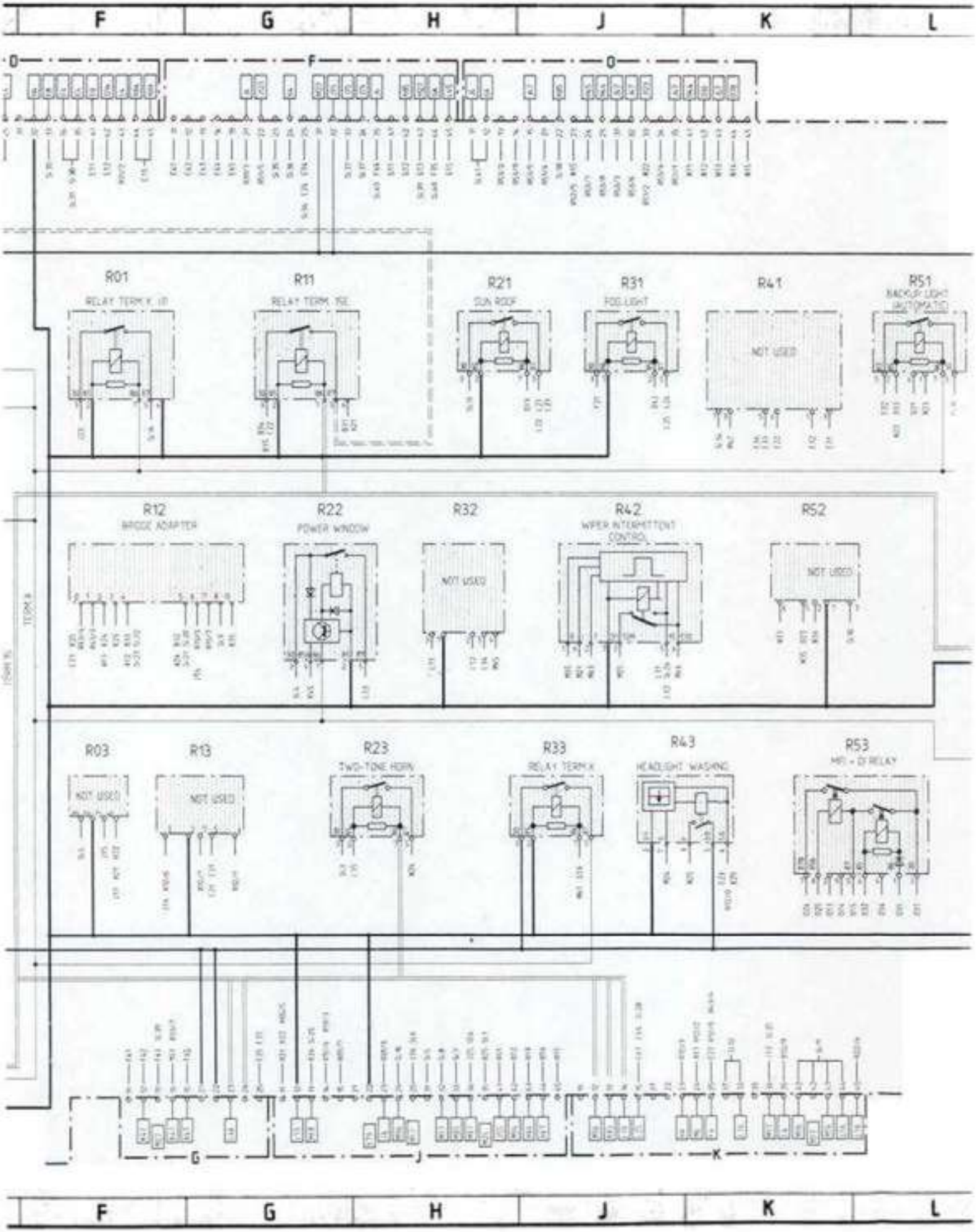
F
G
H
J
K
L
R01
RELAY TERM X, 15
R11
RELAY TERM 30
R21
SUN ROOF
R31
FOG LIGHT
R41
NOT USED
R51
BACKUP LIGHT AUTOMATIC
R12
BRIDGE ADAPTER
R22
POWER WINDOW
R32
NOT USED
R42
WIPER INTERMITTENT CONTROL
R52
NOT USED
R03
NOT USED
R13
NOT USED
R23
TWO-TONE HORN
R33
RELAY TERM X
R43
HEADLIGHT WASHING
R53
MFI - D RELAY

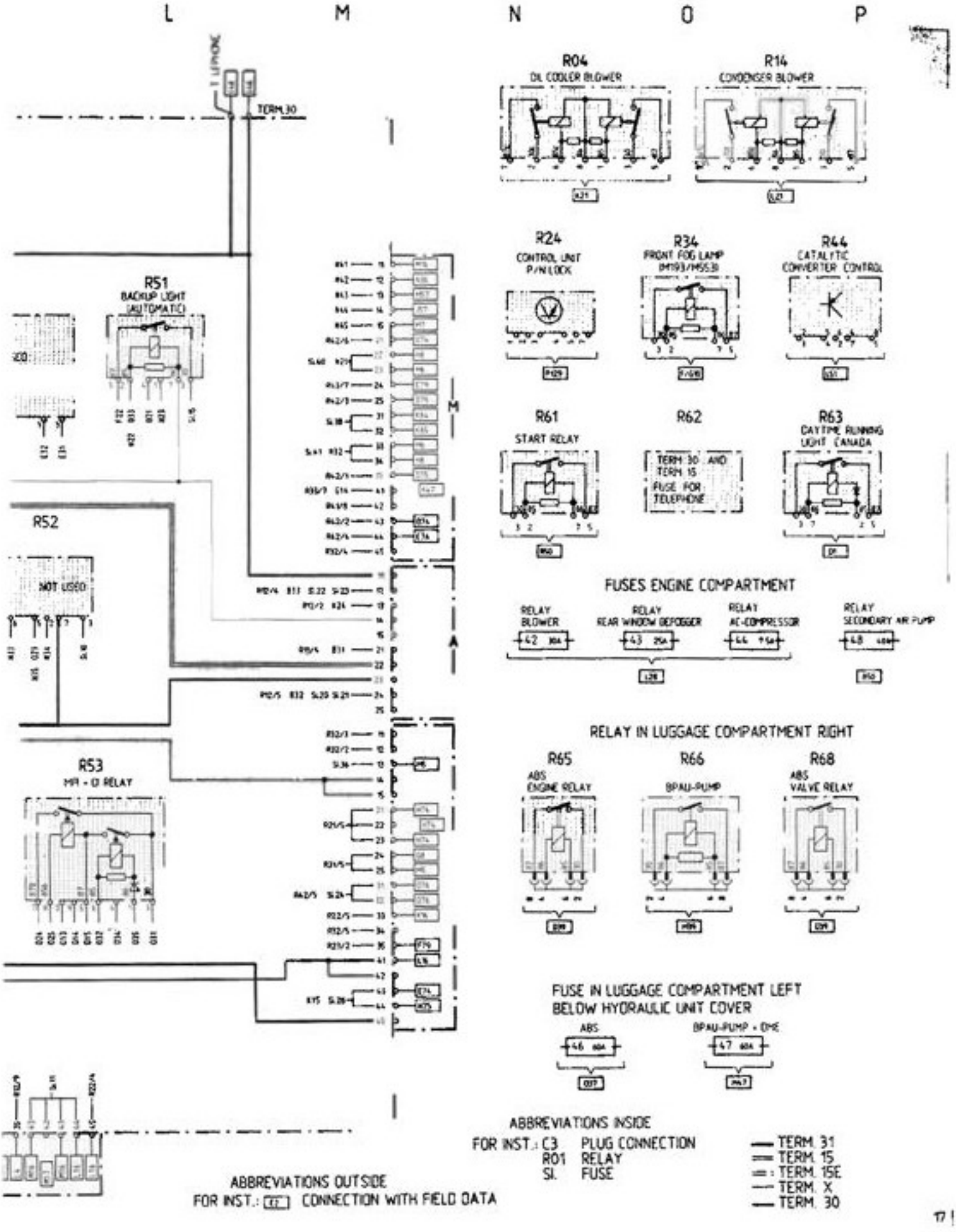
L
M
N
O
P
TERM.30
R04
OIL COOLER BLOWER
R14
CONDENSER BLOWER
R24
CONTROL UNIT
P/N LOCK
R34
FRONT FOG LAMP
R44
CATALYTIC
CONVERTER CONTROL
R51
BACKUP LIGHT
(AUTOMATIC)
R61
START RELAY
R62
TERM 30 AND
TERM 15
FUSE FOR
TELEPHONE
R63
DAYTIME RUNNING
LIGHT CANADA
R52
NOT USED
FUSES ENGINE COMPARTMENT
RELAY
BLOWER
RELAY
REAR WINDOW DEFOGGER
RELAY
AC-COMPRESSOR
RELAY
SECONDARY AIR PUMP
RELAY IN LUGGAGE COMPARTMENT RIGHT
R53
MPI - O RELAY
R65
ABS
ENGINE RELAY
R66
BPAU-PUMP
R68
ABS
VALVE RELAY
FUSE IN LUGGAGE COMPARTMENT LEFT
BELOW HYDRAULIC UNIT COVER
ABS
BPAU-PUMP + DME
ABBREVIATIONS INSIDE
FOR INST.: C3 PLUG CONNECTION
R01 RELAY
SI. FUSE
TERM. 31
TERM. 15
TERM. 15E
TERM. X
TERM. 30
ABBREVIATIONS OUTSIDE
FOR INST.: CONNECTION WITH FIELD DATA